PALLADIUM 765/414

MODEL

SERVICE MANUAL

Spare parts list
Ersatzteilliste

Chassis 7000
DOLBY PRO LOGIC

Ref./Pos.	Part No. ET-Nr.	Description	Bezeichnung	
	S000807009	**Dolby Pro Logic PCB cpl.**	Dolby Pro Logic Modul cpl.	
	S061961959	Zener diode 10V	Z-Diode 10V	
	S063126169	I.C. TDA2616	IC TDA2616	
	S063363009	I.C. M51132L	IC M51132L	
	S063363309	I.C. M65830BP	IC M65830BP	
	S063363509	I.C. M69032P	IC M69032P	
	S063540479	I.C. HEF4047BT	IC HEF4047BT	
	S067330309	Ceramic resonator CSA 2.00 MG	Keramikresonator CSA 2.00 MG	
	S068070909	Relay SVR 12	Relais SVR 12	
	S068500309	Switch SK 22F01G9	Schalter SK 22F01G9	
	S071013409	External speaker connector	Buchse externer Lautsprecher	

Service Manual

Chassis 7000
Dolby Pro Logic

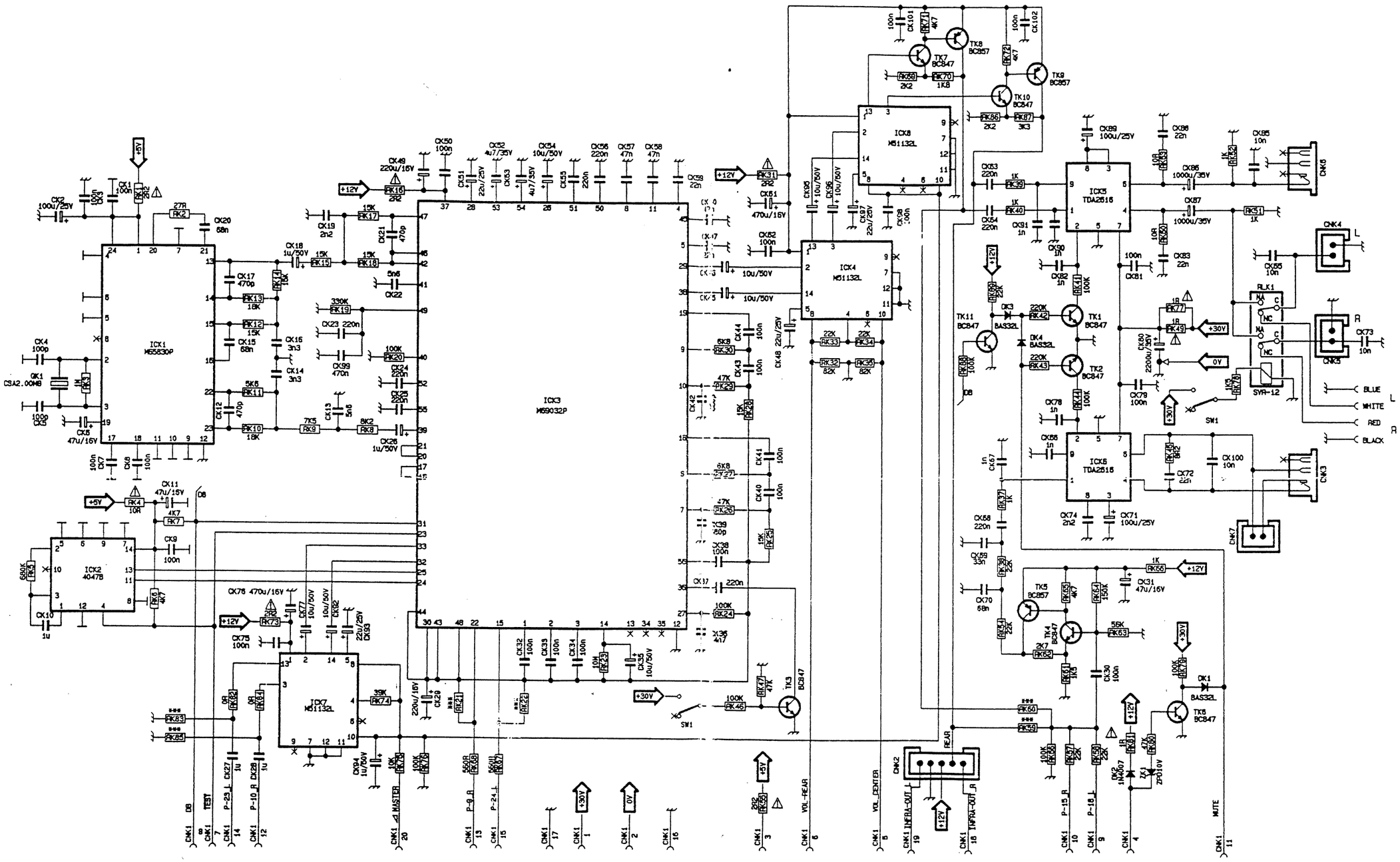

ORION Chassis 7000

SIZE	DIS. Nr.	DOCUMENTO	REV.
B		DOLBY PRO LOGIC DECODER	
SCALA	DATA 2/6/1996	SHEET	

Spare parts list
Ersatzteilliste

Chassis 7000
DOLBY PRO LOGIC

Ref./Pos.	Part No. ET-Nr.	Description	Bezeichnung	
	S000807009	**Dolby Pro Logic PCB cpl.**	Dolby Pro Logic Modul cpl.	
	S061961959	Zener diode 10V	Z-Diode 10V	
	S063126169	I.C. TDA2616	IC TDA2616	
	S063363009	I.C. M51132L	IC M51132L	
	S063363309	I.C. M65830BP	IC M65830BP	
	S063363509	I.C. M69032P	IC M69032P	
	S063540479	I.C. HEF4047BT	IC HEF4047BT	
	S067330309	Ceramic resonator CSA 2.00 MG	Keramikresonator CSA 2.00 MG	
	S068070909	Relay SVR 12	Relais SVR 12	
	S068500309	Switch SK 22F01G9	Schalter SK 22F01G9	
	S071013409	External speaker connector	Buchse externer Lautsprecher	

Zentralwerkstatt und
Ersatzteildepot
für ORION-Produkte

Schwalbe
Service & Versand GmbH

Postfach 10 10 26
63264 Dreieich
Max-Planck-Str. 20
63303 Dreieich

Technische Auskunft (tägl. 9-12 Uhr):
☎ Video/Camcorder: (06103) 39 99-62
☎ TV/Audio: (06103) 39 99-66
☎ Fax: (06103) 39 99-88/63

Ersatzteil-Bestellung:
☎ (06103) 39 99-95
Fax (06103) 39 99-79

Service Manual

Nachdruck bzw. Kopieren dieser Unterlagen ist grundsätzlich verboten!

ORION

Chassis 7000

Dolby Pro Logic

Ergänzung zum Manual Best. Nr. 5911

Bestell-Nr.:
6571

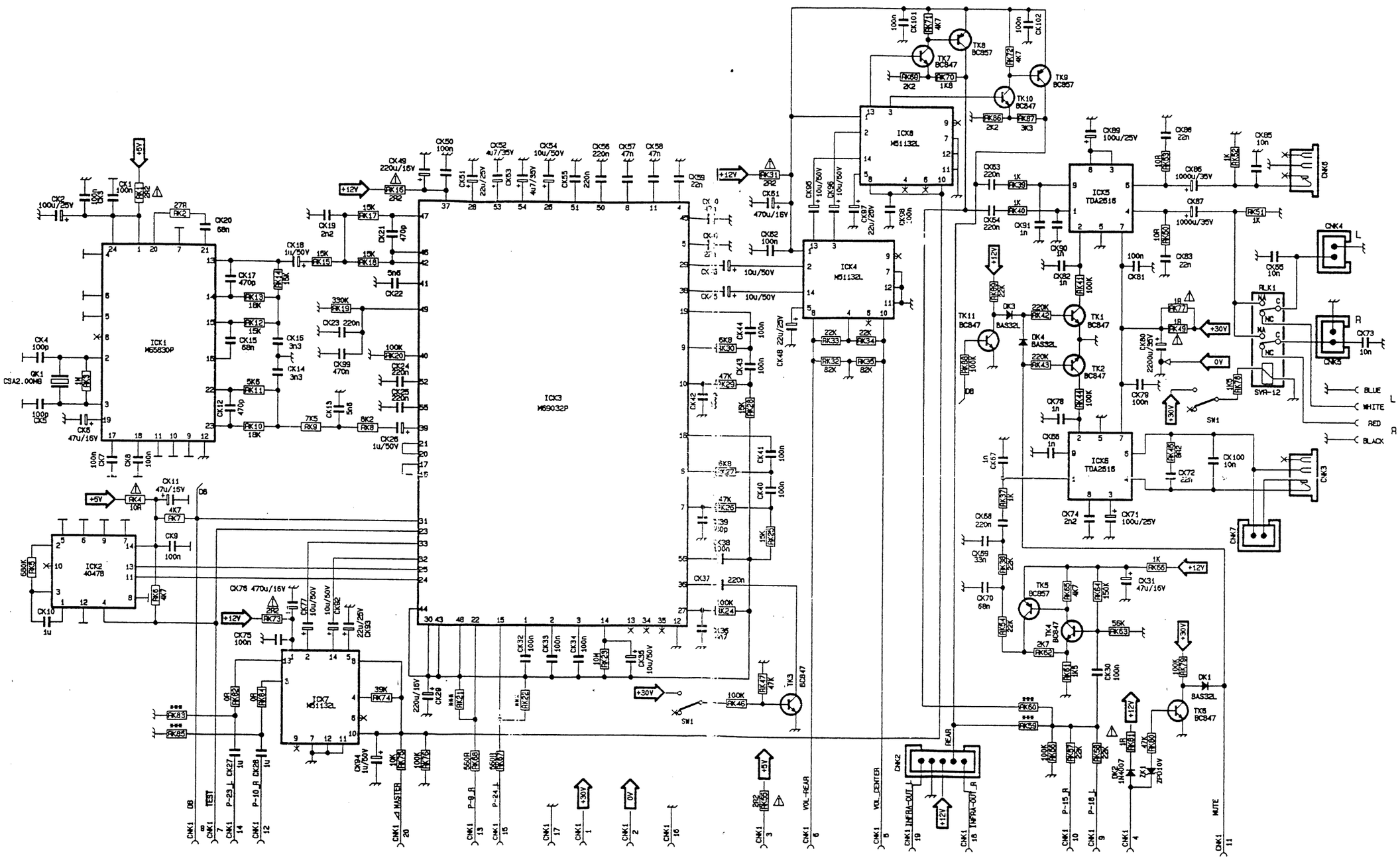

ORION Chassis 7000

SIZE	DIS. Nr.	DOCUMENTO	REV.
B		DOLBY PRO LOGIC DECODER	
SCALA	DATA 2/6/1996	SHEET	

Front-end

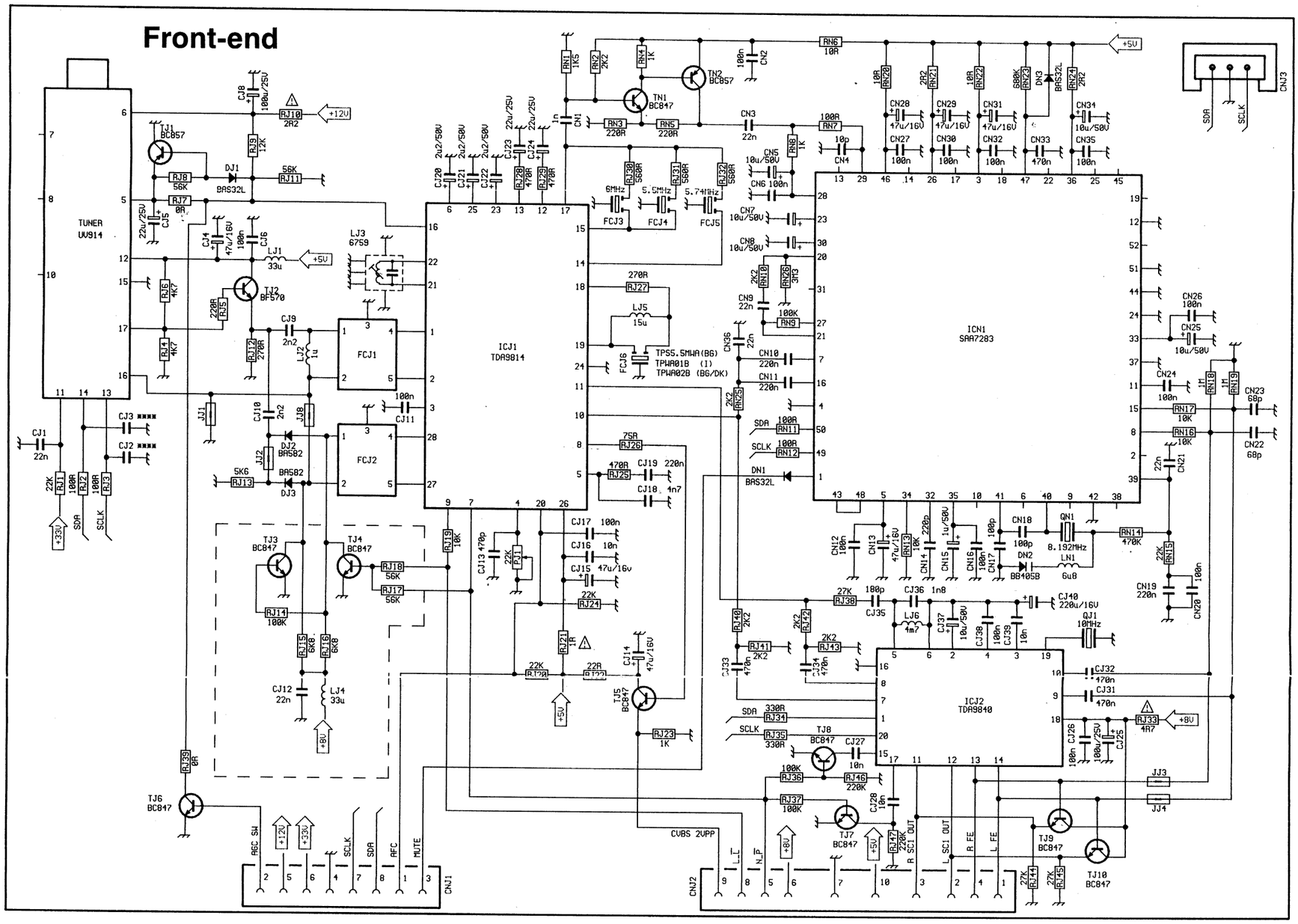

Text

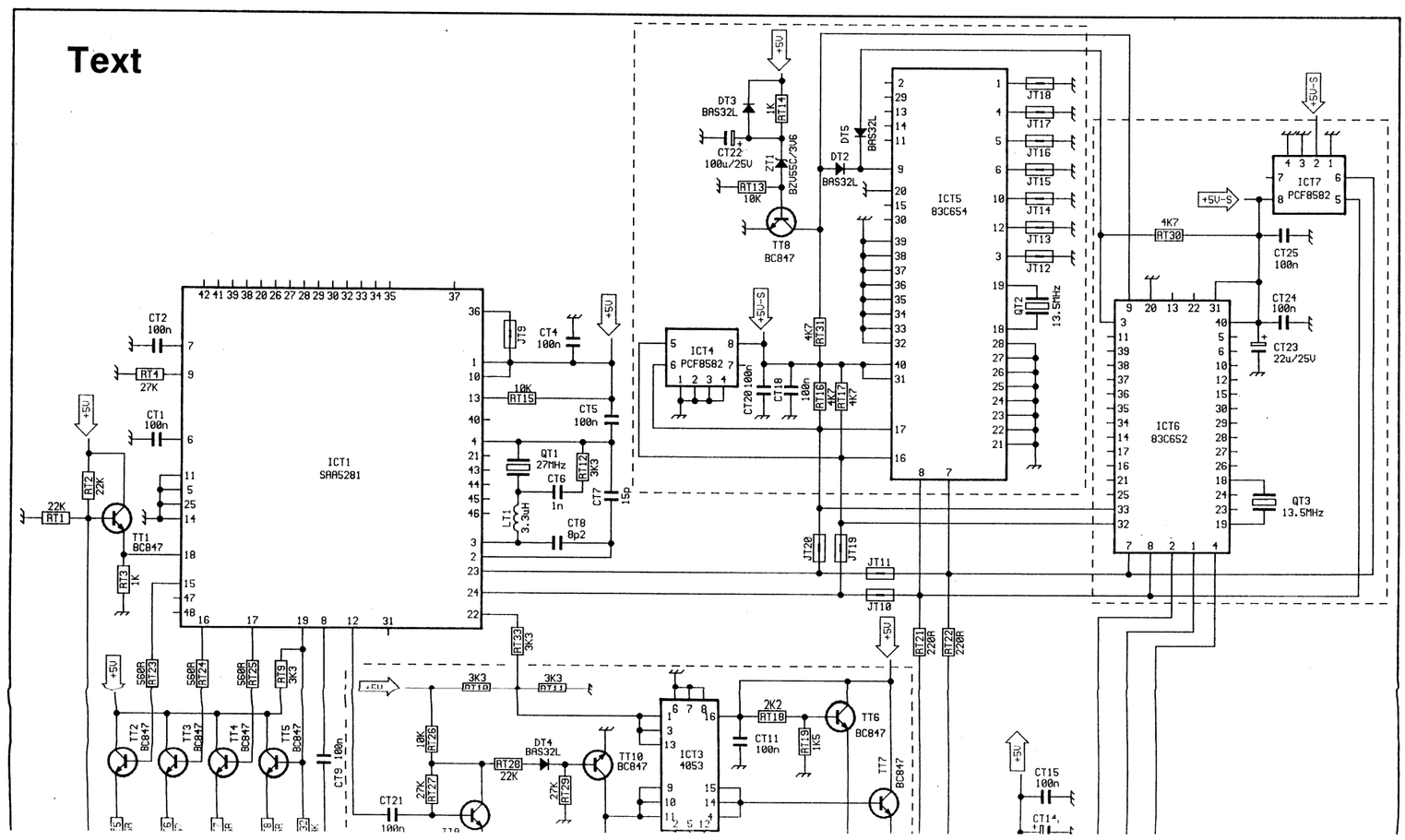

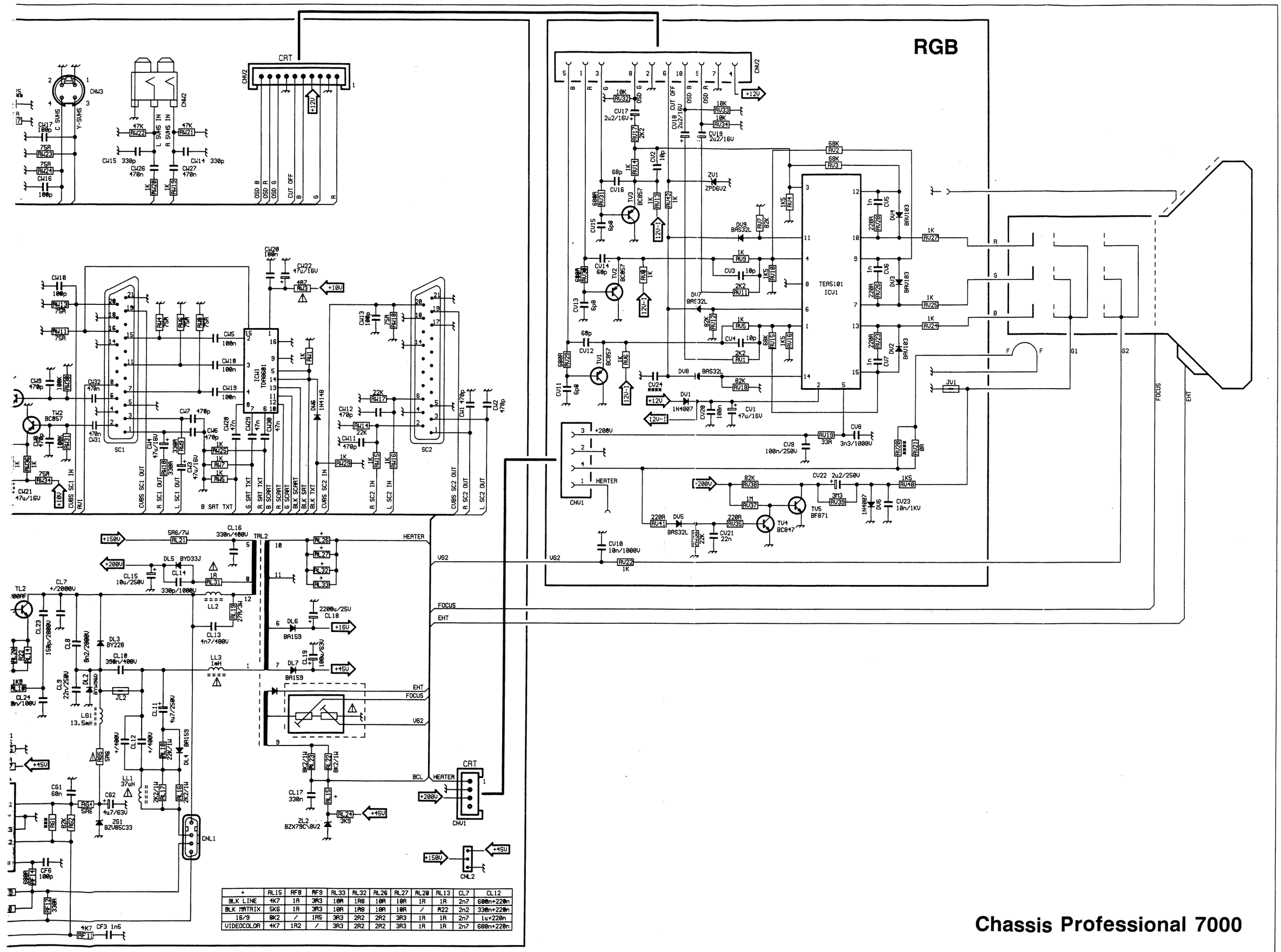

+	RL15	RF8	RF9	RL33	RL32	RL26	RL27	RL20	RL13	CL7	CL12
BLK LINE	4K7	1R	3R3	10R	1R8	10R	10R	1R	1R	2n7	680n+220n
BLK MATRIX	5K6	1R	3R3	10R	1R8	10R	10R	/	R22	2n2	330n+220n
16/9	8K2	/	1R5	3R3	2R2	2R2	3R3	1R	1R	2n7	1u+220n
VIDEOCOLOR	4K7	1R2	/	3R3	2R2	2R2	3R3	1R	1R	2n7	680n+220n

Chassis Professional 7000

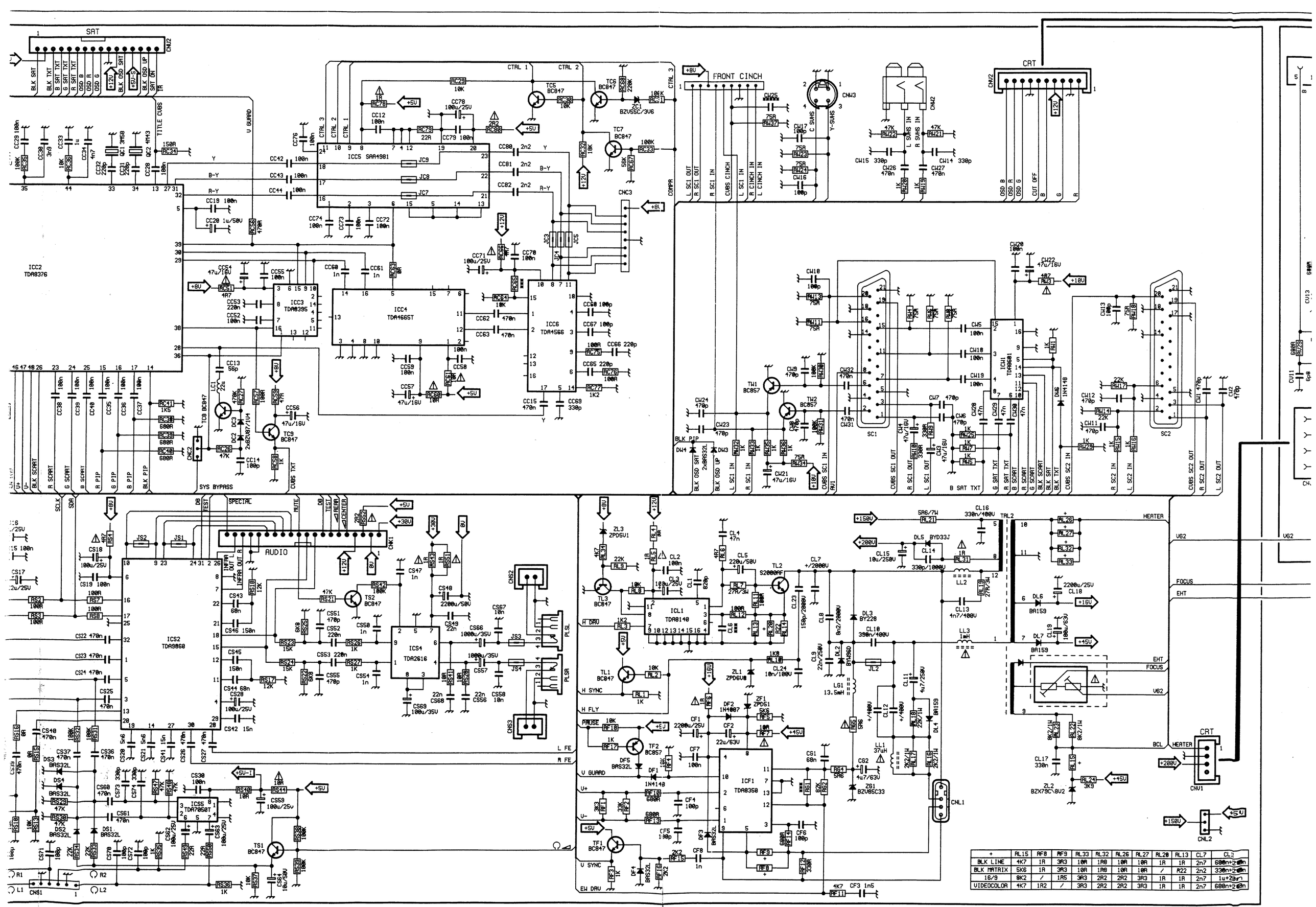

+	RL15	RF8	RF9	RL33	RL32	RL26	RL27	RL20	RL13	CL7	CL[illegible]
BLK LINE	4K7	1R	3R3	10R	1R8	10R	10R	1R	1R	2n7	680n+2[illegible]n
BLK MATRIX	5K6	1R	3R3	10R	1R8	10R	10R	/	R22	2n2	330n+2[illegible]n
16/9	8K2	/	1R5	3R3	2R2	2R2	3R3	1R	1R	2n7	1u+2[illegible]n
VIDEOCOLOR	4K7	1R2	/	3R3	2R2	2R2	3R3	1R	1R	2n7	680n+2[illegible]n

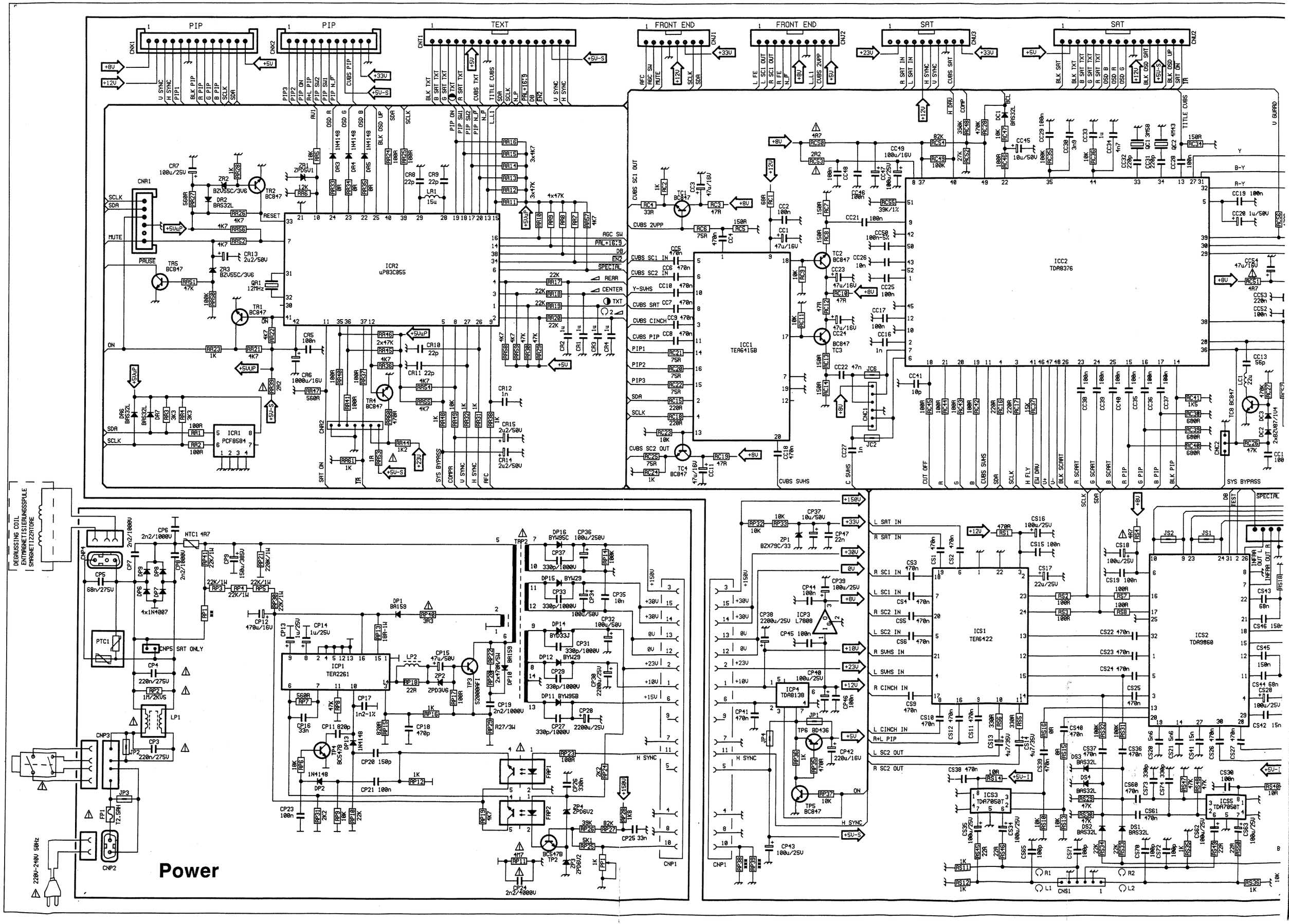
PIP
PIP
TEXT
FRONT END
FRONT END
SAT
SAT
ICA2
uP83C855
ICC2
TDA8376
ICC1
TEA6415B
ICR1
PCF8584
ICP1
TEA2261
ICS1
TEA6422
ICS2
TDA9860
ICP3
L7808
ICP4
TDA8138
ICS3
TDA7050T
ICS5
TDA7050T
Power

Front-end

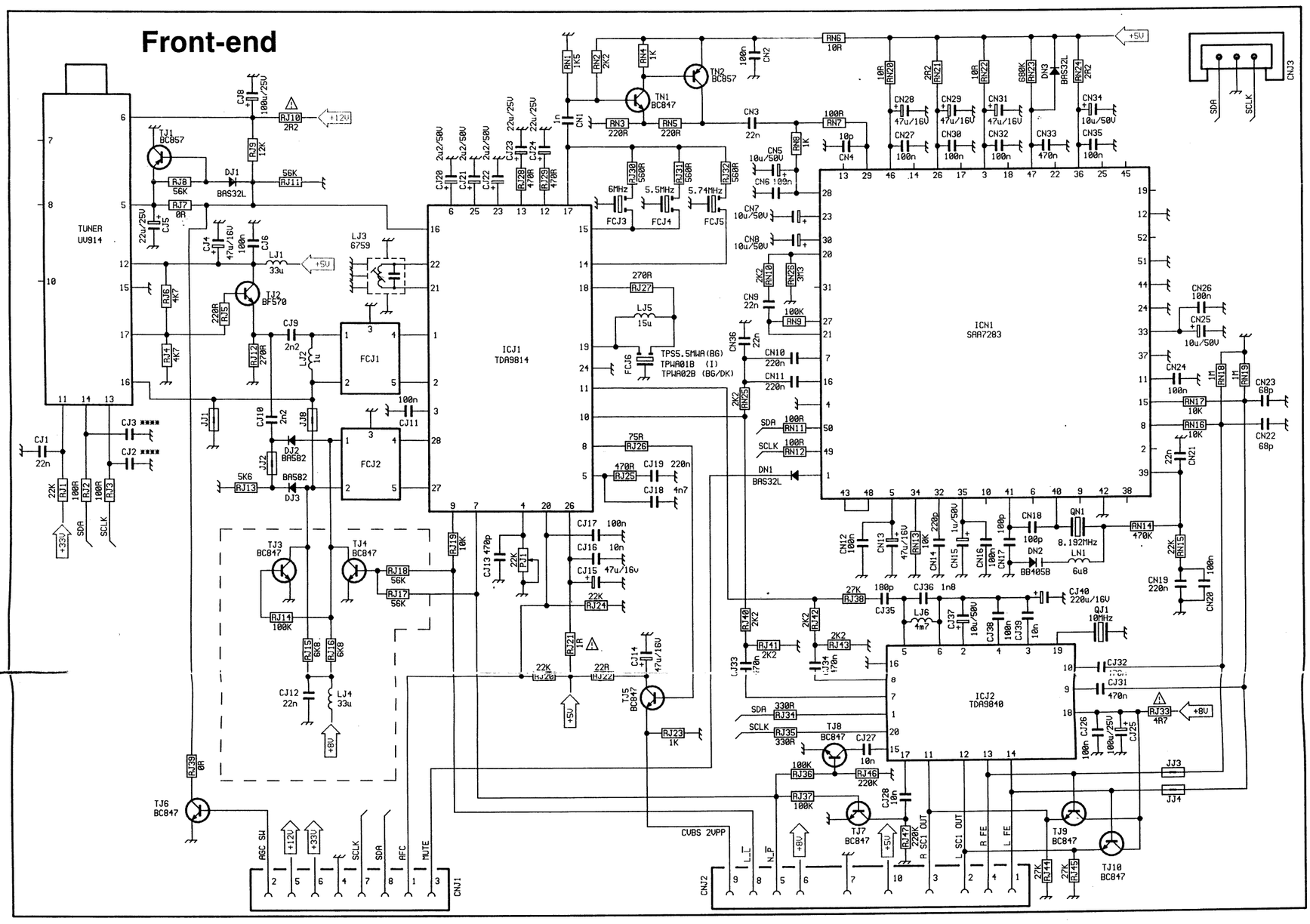

Text

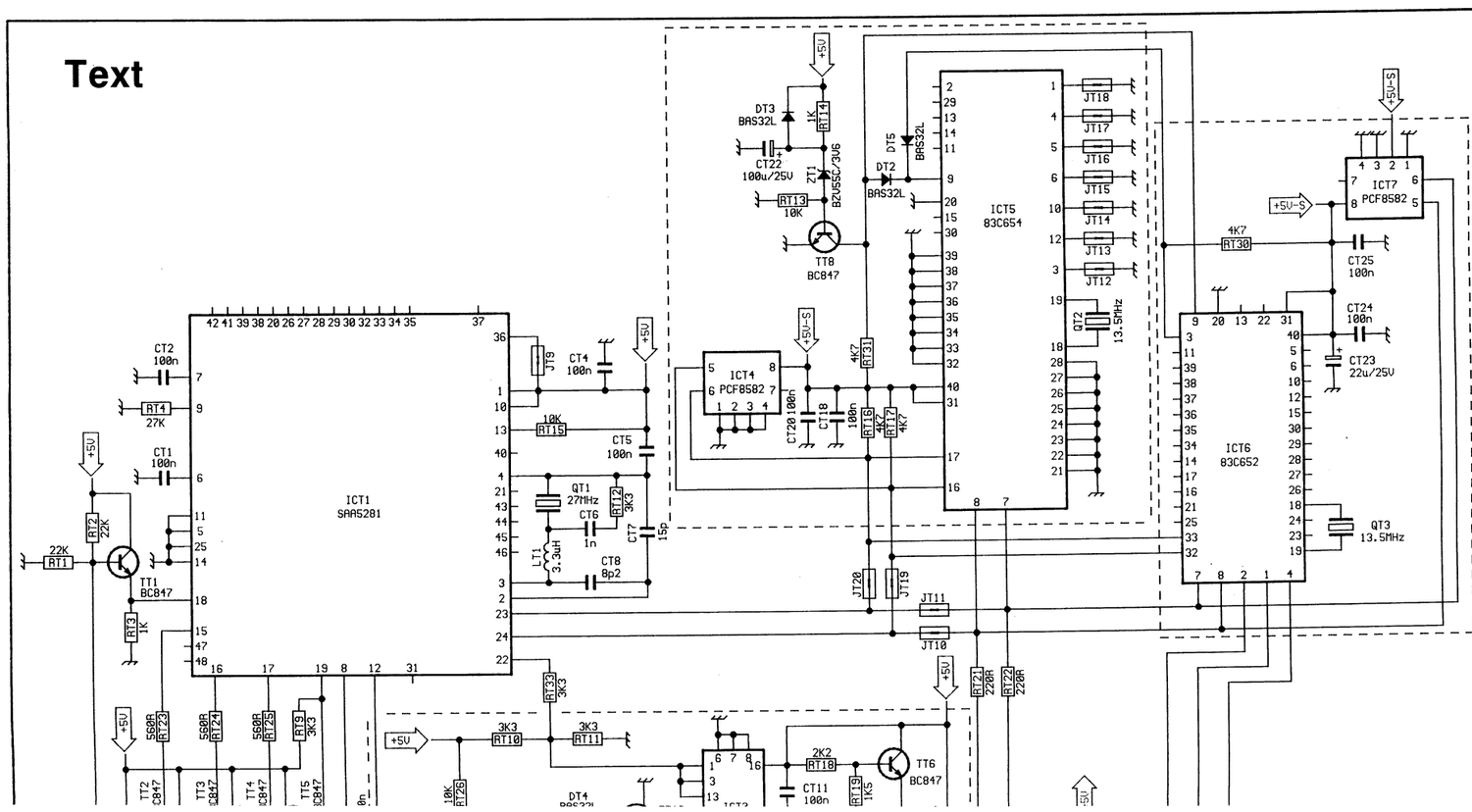

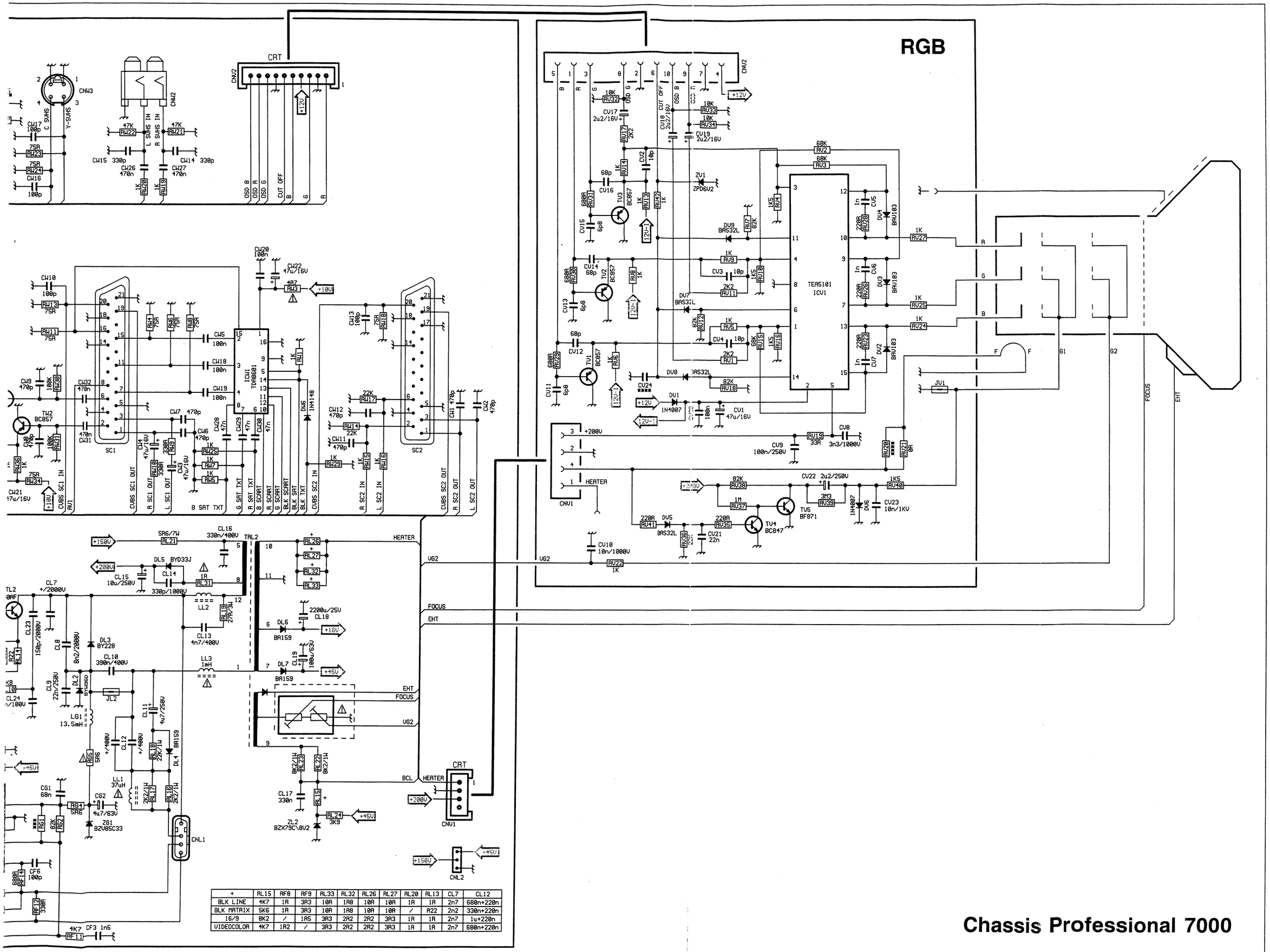

+	RL15	RF8	RF9	RL33	RL32	RL26	RL27	RL20	RL13	CL7	CL12
BLK LINE	4K7	1R	3R3	10R	1R8	10R	10R	1R	1R	2n7	680n+220n
BLK MATRIX	5K6	1R	3R3	10R	1R8	10R	10R	/	R22	2n2	330n+220n
16/9	8K2	/	1R5	3R3	2R2	2R2	3R3	1R	1R	2n7	1u+220n
VIDEOCOLOR	4K7	1R2	/	3R3	2R2	2R2	3R3	1R	1R	2n7	680n+220n

Chassis Professional 7000

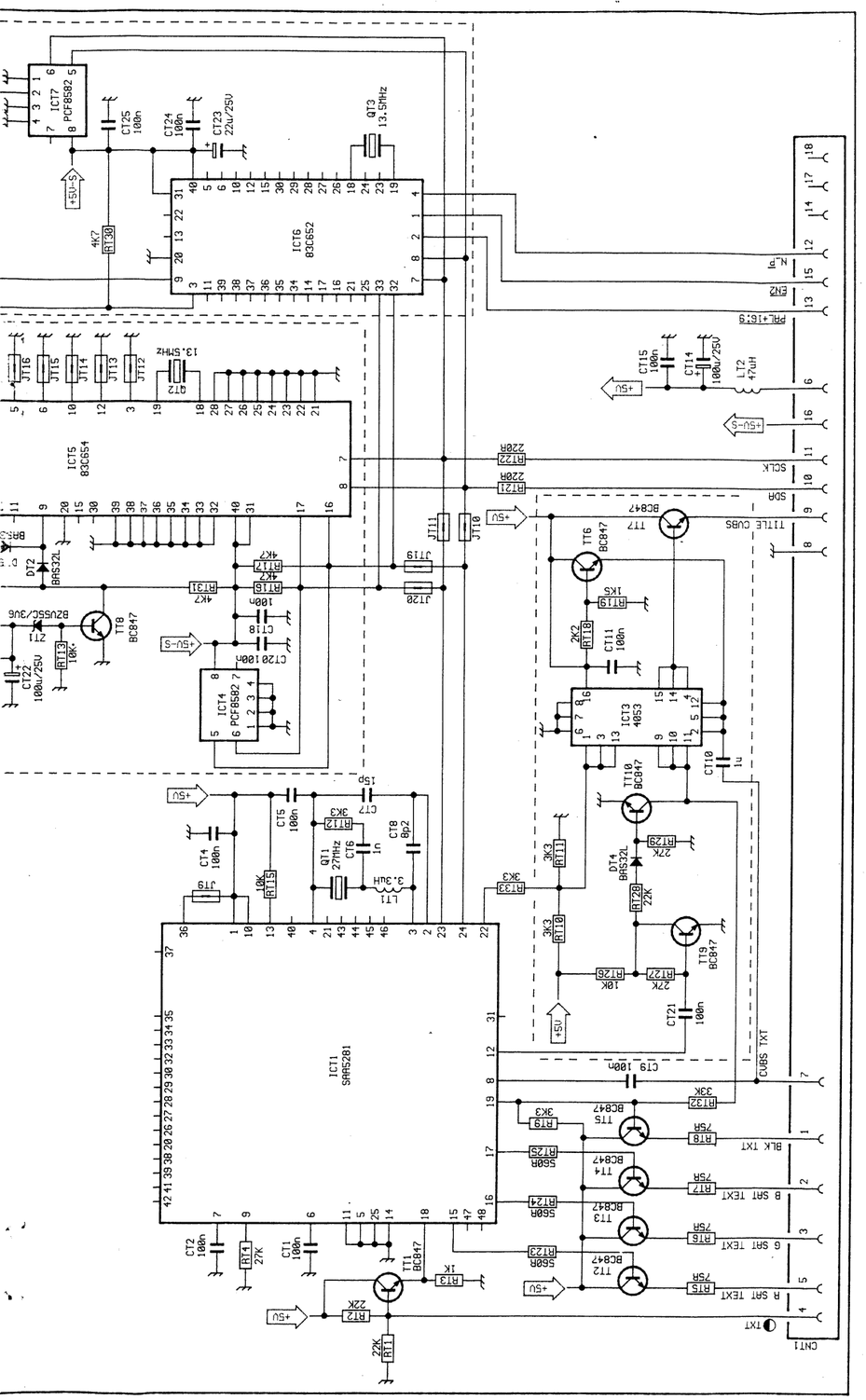
ICT1
SAA5281
ICT2
TDA9800
ICT3
4053
ICT4
PCF8582
ICT5
83C654
ICT6
83C652
ICT7
PCF8582
TITLE CUBS
CUBS TXT
BLK TXT
B SAT TEXT
G SAT TEXT
R SAT TEXT
CNT1

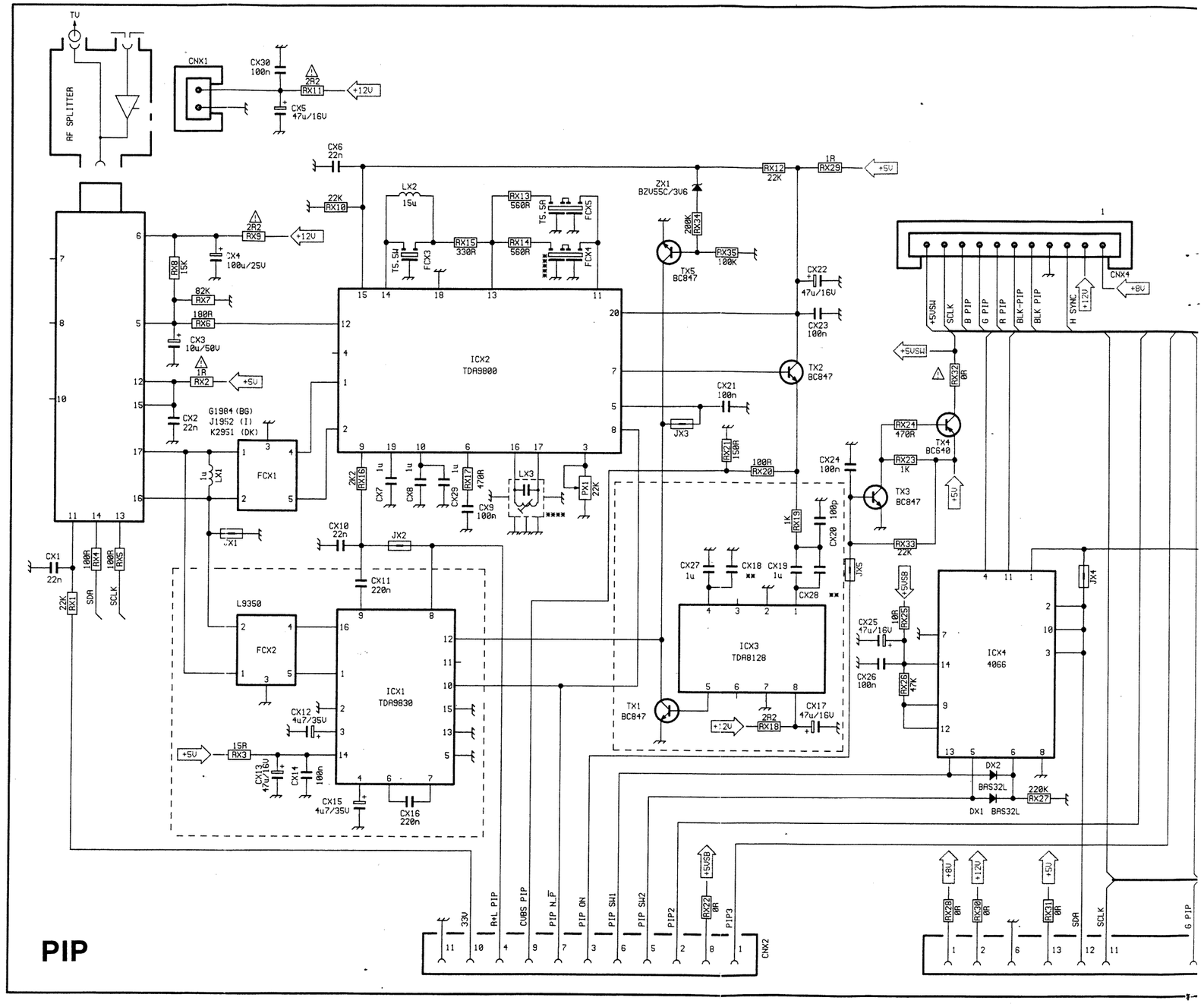
RF SPLITTER
TV
CNX1
CNX2
CNX4
ICX1
TDA9830
ICX2
TDA9800
ICX3
TDA8128
ICX4
4066
FCX1
FCX2
L9350
G1984 (BG)
J1952 (I)
K2951 (DK)
TX1
BC847
TX2
BC847
TX3
BC847
TX4
BC640
TX5
BC847
ZX1
BZV55C/3V6
33V
R+L PIP
CUBS PIP
PIP N_P
PIP ON
PIP SW1
PIP SW2
PIP2
PIP3
SDA
SCLK
G PIP

PIP

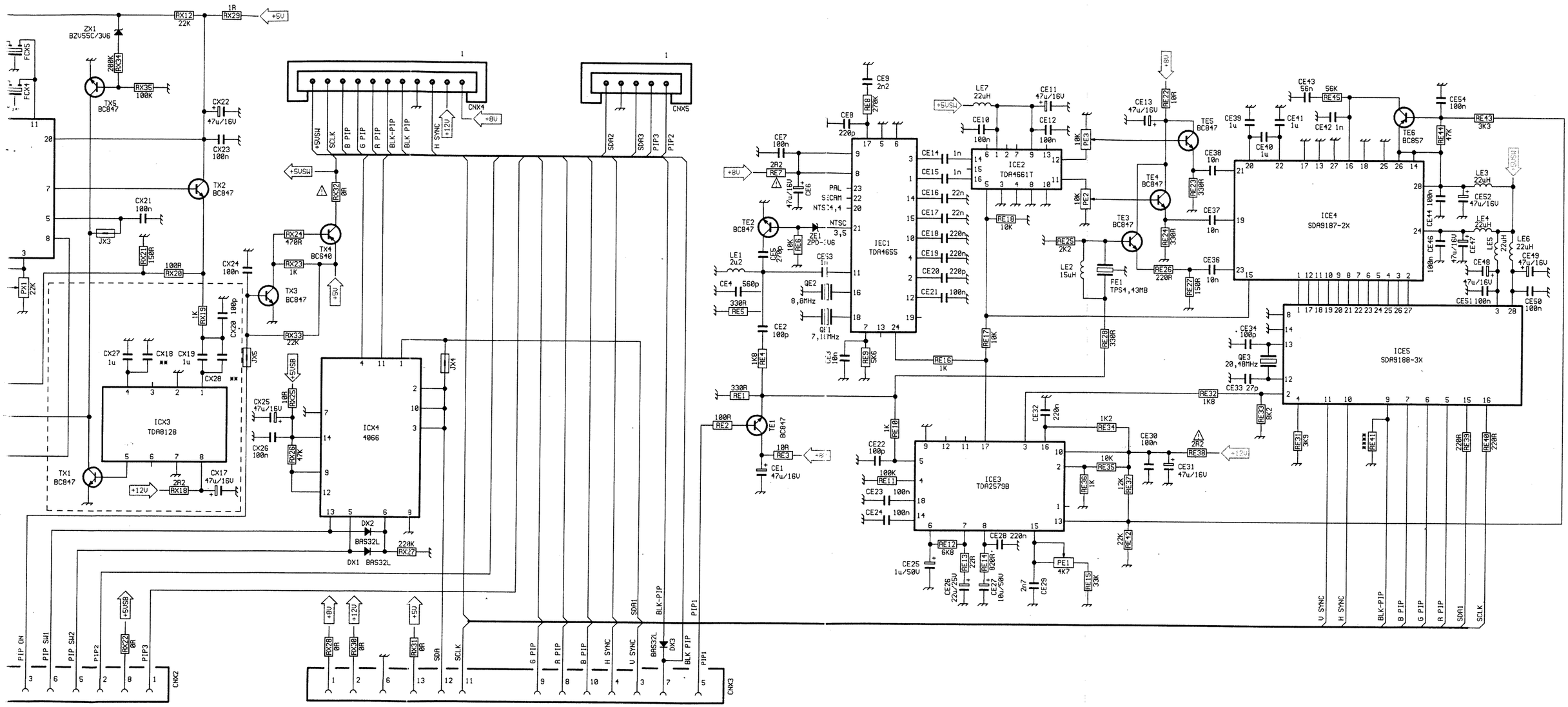
ICX3
TDA8128
ICX4
4066
IEC1
TDA4655
ICE2
TDA4661T
ICE3
TDA2579B
ICE4
SDA9187-2X
ICE5
SDA9188-3X
CNX4
CNX5
CNX2
CNX3
+5V
+8V
+12V
+5VSW
+5VSB
P1P ON
P1P SH1
P1P SH2
P1P2
P1P3
G P1P
R P1P
B P1P
H SYNC
V SYNC
BAS32L
BLK P1P
P1P1
SDA
SCLK
SDA1
BLK-P1P
PAL
SECAM
NTSC 4,4
NTSC 3,5

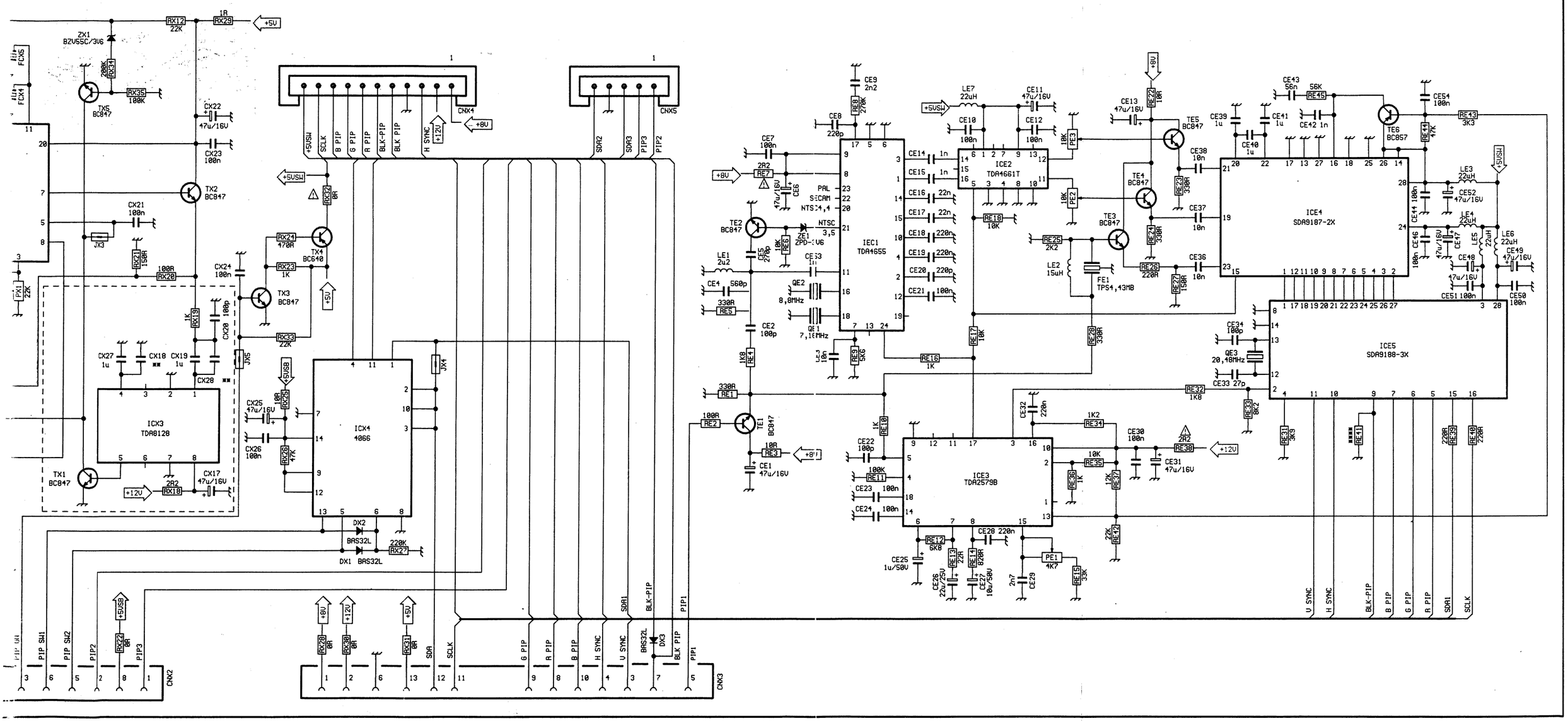

ICX3
TDA8128
ICX4
4066
IEC1
TDA4655
ICE2
TDA4661T
ICE3
TDA2579B
ICE4
SDA9187-2X
ICE5
SDA9188-3X
CNX2
CNX3
CNX4
CNX5

Text

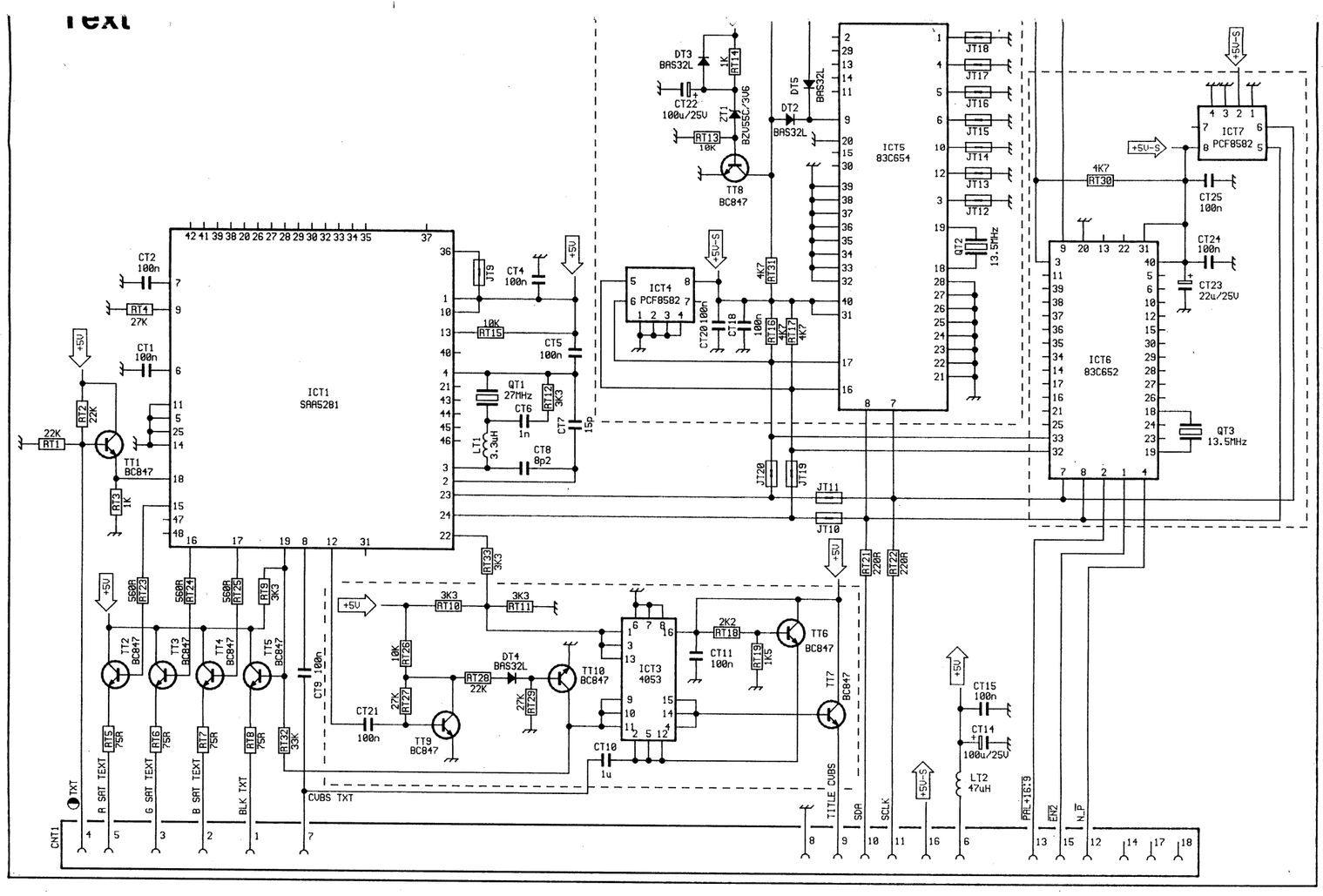
ICT1
SAA5281
ICT5
83C654
ICT6
83C652
ICT7
PCF8582
ICT4
PCF8582
ICT3
4053
QT1
27MHz
QT2
13.5MHz
QT3
13.5MHz
TT1
BC847
TT2
BC847
TT3
BC847
TT4
BC847
TT5
BC847
TT6
BC847
TT7
BC847
TT8
BC847
TT9
BC847
TT10
BC847
DT2
BAS32L
DT3
BAS32L
DT4
BAS32L
DT5
BAS32L
ZT1
BZV55C/3V6
CNT1
TXT
R SAT TEXT
G SAT TEXT
B SAT TEXT
BLK TXT
CVBS TXT
TITLE CVBS
SDA
SCLK
PAL+16:9
EN2
N_P
+5V
+5V-S

PIP

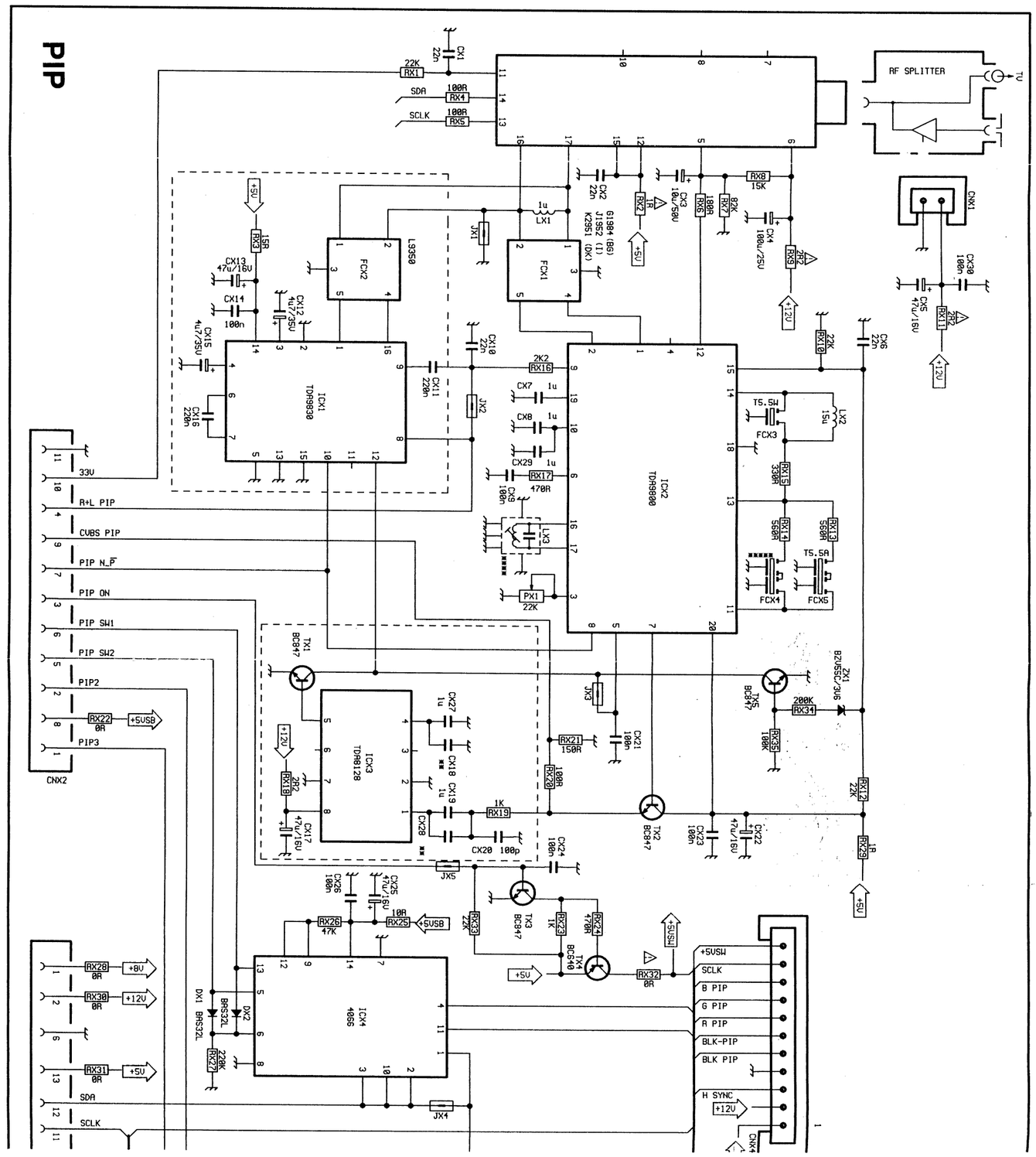
RF SPLITTER
TV
CNX1
CNX2
CNX4
ICX1
TDA9830
ICX2
TDA9800
ICX3
TDA8128
ICX4
4066
FCX1
FCX2
FCX3
FCX4
FCX5
L9350
G1984 (B6)
J1952 (I)
K2951 (DK)
33V
R+L PIP
CVBS PIP
PIP N_P
PIP ON
PIP SW1
PIP SW2
PIP2
PIP3
SDA
SCLK
+5VSW
B PIP
G PIP
R PIP
BLK-PIP
BLK PIP
H SYNC
+12V
+5V
+8V
+5VSB

Spare parts list
Lista parti di ricambio Chassis 7000

Ref./Pos.	Part No. Codice	Description	Descrizione	Price Lit. Prezzo Lit.
	S000547009	**Main PCB 7000 PAL/NTSC cpl. 4:3**	**Chassis 7000 PAL/NTSC cpl. 4:3**	
	S000547209	**Main PCB 7000 PAL/SECAM/NTSC cpl. 4:3**	**Chassis 7000 PAL/SECAM/NTSC cpl. 4:3**	
	S000547509	**Main PCB 7000 PAL/NTSC cpl. 16:9**	**Chassis 7000 PAL/NTSC cpl. 16:9**	
	S000547709	**Main PCB 7000 PAL/SECAM/NTSC cpl. 16:9**	**Chassis 7000 PAL/SECAM/NTSC cpl. 16:9**	
	S017133009	Condensator 330 pF 1000 V	Condensatore 330 pF 1000 V	
	S034332219	Condensator 22 nF 250 V	Condensatore 22 nF 250 V	
	S036211509	Condensator 150 pF 2000 V	Condensatore 150 pF 2000 V	
	S036222709	Condensator 2,7 nF 2000 V	Condensatore 2,7 nF 2000 V	
	S036228209	Condensator 8,2 nF 2000 V	Condensatore 8,2 nF 2000 V	
	S047001009	Fusible resistor 1 Ohm	Resistenza sicurezza 1 Ohm	
	S047004709	Fusible resistor 4,7 Ohm	Resistenza sicurezza 4,7 Ohm	
	S047010009	Fusible resistor 10 Ohm	Resistenza sicurezza 10 Ohm	
	S048002209	Fusible resistor 2,2 Ohm	Resistenza sicurezza 2,2 Ohm	
	S048005609	Fusible resistor 5,6 Ohm	Resistenza sicurezza 5,6 Ohm	
	S048222009	Fusible resistor 2,2 KOhm	Resistenza sicurezza 2,2 KOhm	
	S053910279	Wire wound resistor 27 Ohm 3 W	Resistenza a filo 27 Ohm 3 W	
	S055408209	Wire wound resistor 5,6 Ohm 7 W	Resistenza a filo 5,6 Ohm 7 W	
	S061284619	Diode BA 159	Diodo BA 159	
	S061303209	Diode BYW 96D	Diodo BYW 96D	
	S061316879	Diode BY 228	Diodo BY 228	
	S061401339	Diode BYD 33 J	Diodo BYD 33 J	
	S061961409	Zener diode 5,1 V	Diodo zener 5,1 V	
	S061961619	Zener diode 6,8 V	Diodo zener 6,8 V	
	S061961709	Zener diode BZV 85C33	Diodo zener BZV 85C33	
	S061961819	Zener diode 8,2 V	Diodo zener 8,2 V	
	S061963019	Zener diode 33 V	Diodo zener 33 V	
	S061963309	Zener diode 51 V	Diodo zener 51 V	
	S062530009	Transistor BD 436	Transistor BD 436	
	S062756109	Transistor S2000AF	Transistor S 2000AF	
	S063126169	I.C. TDA 2616	Circuito integrato TDA 2616	
	S063145669	I.C. TDA 4566	Circuito integrato TDA 4566	
	S063164159	I.C. TEA 6415C	Circuito integrato TEA 6415C	
	S063164229	I.C. TEA 6422	Circuito integrato TEA 6422	
	S063170519	I.C. TDA 7050T	Circuito integrato TDA 7050T	
	S063181389	I.C. TDA 8138A	Circuito integrato TDA 8138A	
	S063181409	I.C. TDA 8140	Circuito integrato TDA 8140	

Ref./Pos.	Part No. Codice	Description	Descrizione	Price Lit. Prezzo Lit.
	S063183509	I.C. TDA 8350Q	Circuito integrato TDA 8350Q	
	S063183569	I.C. 87C055 (uP SEI)	Circuito integrato 87C055 (uPSEI)	
	S063183769	I.C. TDA 8376	Circuito integrato TDA 8376	
	S063198609	I.C. TDA 9860	Circuito integrato TDA 9860	
	S063210509	I.C. L 7808CV	Circuito integrato L 7808CV	
	S063285949	I.C. ST 24C04 AB1 (4K)	Circuito integrato ST 24C04 AB1 (4K)	
	S063349819	I.C. SAA 4981 (16:9 only)	Circuito integrato SAA 4981 (solo 16:9)	
	S063183959	I.C. TDA8395 (SECAM only)	Circuito integrato TDA8395 (solo SECAM)	
	S063546659	I.C. TDA 4665T	Circuito integrato TDA 4665T	
	S063586019	I.C. TDA 8601T	Circuito integrato TDA 8601T	
	S065621409	Flyback transformer 7000	Trasformatore EAT 7000	
	S066900159	Quarz 3,58 MHz	Quarzo 3,58 MHz	
	S066900259	Quarz 4,43 MHz	Quarzo 4,43 MHz	
	S066901209	Quarz 12 MHz	Quarzo 12 MHz	
	S067071009	E/W coil 13,5 mH	Bobina choke E/W 13,5 mH	
	S067081009	Bridge coil AT 4043/100	Bobina ponte AT 4043/100	
	S067081409	Linearity coil	Bobina linearità	
	S071013409	External speaker connector	Presa altoparlante supplementare	
	S071014209	SCART connector	Presa SCART	
	S071015409	Double vertical audio RCA cinch	Doppia presa RCA audio verticale	
	S071020009	S-VHS connector 4 pole	Presa S-VHS 4 poli	
	S000557009	**IF Video/audio PCB cpl. (A2)**	**Modulo FI video/audio cpl. (A2)**	
	S000557109	**IF Video/audio PCB cpl. (A2/NICAM)**	**Modulo FI video/audio (A2/NICAM)**	
	S000557129	**IF Video/audio PCB cpl. (A2/NICAM/AM)**	**Modulo FI video/audio (A2/NICAM/AM)**	
	S000557119	**IF Video/audio PCB cpl. (NICAM)**	**Modulo FI video/audio (NICAM)**	
	S063598140	I.C. TDA 9814T	Circuito integrato TDA 9814T	
	S063598409	I.C. TDA 9840T	Circuito integrato TDA 9840T	
	S063372839	I.C. SAA 7283	Circuito integrato SAA 7283	
	S066900409	Quarz 10 MHz	Quarzo 10 MHz	
	S067320709	SAW filter G3964M	Filtro SAW G3964M	
	S067321509	SAW filter G9353M	Filtro SAW G9353M	
		SAW filter	Filtro SAW	
		SAW filter	Filtro SAW	
	S067400529	Ceramic filter SFT 5,5 MA	Filtro ceramico SFT 5,5MA	
	S067400539	Ceramic filter SFT 5,74 MA	Filtro ceramico SFT 5,74 MA	
	S067401089	Ceramic filter SFT 6,0 MA	Filtro ceramico SFT 6,0 MA	
	S067401109	Ceramic filter SFT 6,5 MA	Filtro ceramico SFT 6,5 MA	
	S067401059	Ceramic filter TPS 5,5 MWA	Filtro ceramico TPS 5,5 MWA	
	S067400009	Ceramic filter TPWA 01B	Filtro ceramico TPWA 01B	
	S067407809	Coil	Bobina	

Ref./Pos.	Part No. Codice	Description	Descrizione	Price Lit. Prezzo Lit.
	S067430009	Choke 4,7 mH 2%	Choke 4,7 mH 2%	
	S069024409	Tuner	Tuner	
	S000567509	**Power PCB 7000 cpl.**	**Modulo Power 7000 cpl.**	
	S014182009	Condensator 820 pF NPO	Condensatore 820 pF NPO	
	S017133009	Condensator 330 pF 1000 V	Condensatore 330 pF 1000 V	
	S017222009	Condensator 2,2 nF 1000 V	Condensatore 2,2 nF 1000 V	
	S020222009	Condensator 2,2 nF 4000 V	Condensatore 2,2 nF 4000 V	
	S029621209	Condensator 1,2 nF 1%	Condensatore 1,2 nF 1%	
	S030236809	Condensator 68 nF 250 VAC	Condensatore 68 nF 250 VAC	
	S030242209	Condensator 220 nF 250 VAC	Condensatore 220 nF 250 VAC	
	S034322219	Condensator 2,2 nF 250 VAC	Condensatore 2,2 nF 250 VAC	
	S047003309	Fusible resistor 3,3 Ohm	Resistenza sicurezza 3,3 Ohm	
	S053051009	Safety resistor 1 MOhm VR37	Resistenza 1 MOhm VR37	
	S053210709	Safety resistor 4,7 MOhm VR68	Resistenza 4,7 MOhm VR68	
	S054000279	Wire wound resistor 0,27 Ohm 3 W	Resistenza a filo 0,27 Ohm 3 W	
	S055491009	Wire wound resistor 1 Kohm 9 W	Resistenza a filo 1 KOhm 9 W	
	S056590209	NTC resistor 4,7 Ohm	Resistenza NTC 4,7 Ohm	
	S056591909	PTC resistor	Resistenza PTC	
	S061111329	Diode 1N4007	Diodo 1N4007	
	S061284619	Diode BA159	Diodo BA159	
	S061300509	Diode BYW29/200	Diodo BYW29/200	
	S061302409	Diode BYW95B	Diodo BYW95B	
	S061302609	Diode BYW95C	Diodo BYW95C	
	S061401339	Diode BYD33 J	Diodo BYD33 J	
	S061912239	Zener diode 6,2 V	Diodo zener 6,2 V	
	S061961079	Zener diode 3,6 V	Diodo zener 3,6 V	
	S062756109	Transistor S 2000AF	Transistor S 2000AF	
	S063164509	I.C. TEA 2261	Circuito integrato TEA 2261	
	S063411019	Optocoupler TCDT1101GB	Fotoaccoppiatore TCDT1101GB	
	S065707109	Power switch transformer 7000	Trasformatore SMT 7000	
	S066541709	Line filter	Filtro rete	
	S070506309	Fuse T 2,5A H	Fusibile T 2,5A H	
	S087171509	Security cover	Copertura isolante	
	S000677209	**RGB Amplif. PCB cpl.**	**Modulo Amplif. RGB cpl.**	
	S017233009	Condensator 3,3 nF 1000 V	Condensatore 3,3 nF 1000 V	
	S035931019	Condensator 10 nF 1000 V	Condensatore 10 nF 1000 V	
	S040590229	Elko 2,2 uF 250 V	Condensatore elettrolitico 2,2 uF 250 V	
	S061281059	Diode BAV 103-GS08	Diodo BAV 103-GS08	
	S062740869	Transistor BF 871	Transistor BF 871	

Ref./Pos.	Part No. Codice	Description	Descrizione	Price Lit. Prezzo Lit.
	S063151019	I.C. TEA 5101A	Circuito integrato TEA 5101A	
	S070001209	CRT socket	Zoccolo cinescopio	
	S070001609	CRT socket (dynamic focus only)	Zoccolo cinescopio (solo fuoco dinamico)	
	S000747139	**Teletext TOP/FLOF/ATS PCB cpl.**	**Modulo Televideo 7000 TOP/FLOF/ATS cpl.**	
	S063185719	I.C. ST 24C02 (2k)	Circuito integrato ST 24C02 (2K)	
	S063283519	I.C. 87C652-4N40 (uP ATS)	Circuito integrato 87C652-4N40 (uP ATS)	
	S063283709	I.C. P83C654 FBP/0541 CTV988	Circuito integrato P83C654 FBP/0541 CTV988	
	S063285949	I.C. ST 24C04 AB1 (4K)	Circuito integrato ST 24C04 AB1 (4K)	
	S063352810	I.C. SAA 5281 P/E	Circuito integrato SAA 5281 P/E	
	S063574009	I.C. 74HC4053D	Circuito integrato 74HC4053D	
	S066901209	Quarz 12 MHz	Quarzo 12 MHz	
	S066902709	Quarz 27 MHz	Quarzo 27 MHz	

Spare parts list
Ersatzteilliste

TV 2807 / 2816 PIP/ 8201 / 8295 PIP

Chassis Professional 7000

Ref./Pos.	Ersatzeil-NR.	Description	Bezeichnung
	S000847029	Manuals controls PCB cpl	Bedienplatine komplett
	S062000409	LED diode red/green	LED rot/grün
	S068057009	Mains switch	Netzschalter
	S068056309	Pusch EKPT 1105 S	Schalter EKPT 1105 S
	S068149109	IR receiver TFMS 5360	Infrarotempfänger TFMS 5360
	S071015309	Earphone jack	Kopfhörerbuchse
	S071020109	RCA jack white	Chinchbuchse weis
	S071020119	RCA jack red	Chinchbuchse rot
	S071020129	RCA jack yellow	Chinchbuchse gelb
	S078970009	Manuals controls holder	Halter Bedienteil
	S079070009	Door	Tür
	S082811409	Door holder	Türhalter
	S082900009	Door push-push block	Türöffner
	S083307009	Mains switch button	Knopf Netzschalter
	S007865359	Cabinet front	Gehäusefront (TV 8201/8295)
	S007864609	Cabinet front	Gehäusefront (TV 2807/2816)
	S078154309	Cabinet	Mittelgehäuse (TV 8201/8295)
	S078145009	Cabinet	Mittelgehäuse (TV 2807/2816)
	S080154309	Back cover	Gehäuserückwand
	S060332009	CRT 32" W76EDX013X101	Bildröhre W76EDX013X101 (TV 8201/8295)
	S060328509	CRT 28" W66EDX013X010	Bildröhre W66DX013X010 (TV 2807/2616)
	S068270109	Transmitter 7000	Fernbedienung 7000
	S073173509	Speaker 8 Ohm	Lautsprecher 8 Ohm
	S073173109	Woofer speaker 8 Ohm	Baßlautsprecher 8 Ohm
	S000887009	Subwoofer box cpl.	Lautsprecherbox komplett
	S087170009	Chassis holder side	Chassishalter Seite
	S087170509	Chassis holder front	Chassishalter Front
	S087171009	Chassis rear connector cover	Buchsenplatte

Spare parts list
Ersatzteilliste

TV 735 / 755S
Chassis Professional 7000

Ref./Pos.	Ersatzeil-NR.	Description	Bezeichnung
	S000847019	Manuals controls PCB cpl.	Bedienplatine komplett
	S062000409	LED diode red/green	LED rot/grün
	S068055309	Mains switch	Netzschalter
	S068056309	Pusch EKPT 1105 S	Schalter EKPT 1105 S
	S068149109	IR receiver TFMS 5360	Infrarotempfänger TFMS 5360
	S071015309	Earphone jack	Kopfhörerbuchse
	S078949519	Manuals controls holder	Halter Bedienteil
	S079049409	Door	Tür
	S083305009	Mains switch button	Knopf Netzschalter
	S091041609	Mains switch spring	Feder Netzschalter
	S007865439	Cabinet front	Gehäusefront (TV 735)
	S007865469	Cabinet front	Gehäusefront (TV 755S)
	S078154309	Cabinet	Mittelgehäuse
	S080154209	Back cover	Gehäuserückwand
	S060328019	CRT 28" A66EAK71X01	Bildröhre A66EAK71X01 (TV 735)
	S060328309	CRT 28" A66EAK252X11	Bildröhre A66EAK252X11 (TV 755S)
	S068270109	Transmitter 7000 ORION	Fernbedienung 7000
	S073173409	Speaker 8 Ohm	Lautsprecher 8 Ohm
	S087170009	Chassis holder side	Chassishalter Seite
	S087170509	Chassis holder front	Chassishalter Front
	S087171009	Chassis rear connector cover	Buchsenplatte

Spare parts list
Ersatzteilliste

TV 8607 PIP
Chassis Professional 7000

Ref./Pos.	Ersatzeil-NR.	Description	Bezeichnung
	S000847039	Manuals controls PCB cpl.	Bedienplatine komplett
	S000834309	IR receiver PCB cpl.	Infrarotempfängerplatine komplett
	S062000409	LED diode red/green	LED rot/grün
	S068055309	Mains switch	Netzschalter
	S068056309	Pusch EKPT 1105 S	Schalter EKPT 1105 S
	S068149109	IR receiver TFMS 5360	Infrarotempfänger TFMS 5360
	S071015309	Earphone jack	Kopfhörerbuchse
	S078941709	Manuals controls holder	Halter Bedienteil
	S079041509	Door	Tür
	S083304209	Mains switch button	Knopf Netzschalter
	S091041709	Mains switch spring	Feder Netzschalter
	S007867109	Cabinet front	Gehäusefront
	S078171009	Cabinet	Mittelgehäuse
	S078171109	Subwoofer cover	Lautsprecherbox
	S080141909	Back cover	Gehäuserückwand
	S079471009	Front glass	Scheibe
	S060334109	CRT 34" A79ECU33X01	Bildröhre A79ECU33X01
	S068270109	Transmitter 7000 ORION	Fernbedienung 7000
	S073172209	Speaker 8 Ohm	Lautsprecher 8 Ohm
	S087170009	Chassis holder side	Chassishalter Seite
	S087170509	Chassis holder front	Chassishalter Front
	S087171009	Chassis rear connector cover	Buchsenplatte

ORIO-00312

Spare parts list
Ersatzteilliste

Chassis 7000

Revision 1.6

Ref./Pos.	Part No. ET-Nr.	Description	Bezeichnung
	S000547009	**Main PCB 7000 PAL/NTSC cpl. 4:3**	**Chassis 7000 PAL/NTSC kpl. 4:3**
	S000547209	**Main PCB 7000 PAL/SECAM/NTSC cpl. 4:3**	**Chassis 7000 PAL/SECAM/NTSC kpl. 4:3**
	S000547509	**Main PCB 7000 PAL/NTSC cpl. 16:9**	**Chassis 7000 PAL/NTSC kpl. 16:9**
	S000547709	**Main PCB 7000 PAL/SECAM/NTSC cpl. 16:9**	**Chassis 7000 PAL/SECAM/NTSC kpl. 16:9**
	S000547519	**Main PCB 7000 PAL/NTSC cpl. 16:9/36"**	**Chassis 7000 PAL/NTSC kpl. 16:9/36"**
	S017133009	Condensator 330 pF 1000 V	Kondensator 330 pF 1000 V
	S034332219	Condensator 22 nF 250 V	Kondensator 22 nF 250 V
	S036211509	Condensator 150 pF 2000 V	Kondensator 150 pF 2000 V
	S036222709	Condensator 2,7 nF 2000 V	Kondensator 2,7 nF 2000 V
	S036228209	Condensator 8,2 nF 2000 V	Kondensator 8,2 nF 2000 V
	S047001009	Fusible resistor 1 Ohm	Sicherheitswiderstand 1 Ohm
	S047004709	Fusible resistor 4,7 Ohm	Sicherheitswiderstand 4,7 Ohm
	S047010009	Fusible resistor 10 Ohm	Sicherheitswiderstand 10 Ohm
	S048002209	Fusible resistor 2,2 Ohm	Sicherheitswiderstand 2,2 Ohm
	S048005609	Fusible resistor 5,6 Ohm	Sicherheitswiderstand 5,6 Ohm
	S048222009	Fusible resistor 2,2 KOhm	Sicherheitswiderstand 2,2 KOhm
	S053910279	Wire wound resistor 27 Ohm 3 W	Widerstand 27 Ohm 3 W
	S055408209	Wire wound resistor 5,6 Ohm 7 W	Widerstand 5,6 Ohm 7 W
	S061284619	Diode BA 159	Diode BA 159
	S061303209	Diode BYW 96D	Diode BYW 96D
	S061316879	Diode BY 228	Diode BY 228
	S061401339	Diode BYD 33 J	Diode BYD 33 J
	S061961409	Zener diode 5,1 V	Diode zener 5,1 V
	S061961619	Zener diode 6,8 V	Diode zener 6,8 V
	S061961709	Zener diode BZV 85C33	Diode zener BZV 85C33
	S061961819	Zener diode 8,2 V	Diode zener 8,2 V
	S061963019	Zener diode 33 V	Diode zener 33 V
	S061963309	Zener diode 51 V	Diode zener 51 V
	S062530009	Transistor BD 436	Transistor BD 436
	S062756109	Transistor S2000AF	Transistor S 2000AF
	S063126169	I.C. TDA 2616	IC TDA 2616
	S063145669	I.C. TDA 4566	IC TDA 4566
	S063164159	I.C. TEA 6415C	IC TEA 6415C
	S063164229	I.C. TEA 6422	IC TEA 6422
	S063170519	I.C. TDA 7050T	IC TDA 7050T
	S063181389	I.C. TDA 8138A	IC TDA 8138A
	S063181409	I.C. TDA 8140	IC TDA 8140
	S063183509	I.C. TDA 8350Q	IC TDA 8350Q
	S063183569	I.C. 87C055 (1.4.1)	IC 87C055 (1.4.1)

312

Ref./Pos.	Part No. ET-Nr.	Description	Bezeichnung
	S063183579	I.C. 87C055 1.6.2)	IC 87C055 1.6.2)
	S063183589	I.C. 87C055 (2.5)	IC 87C055 (2.5)
	S063183769	I.C. TDA 8376	IC TDA 8376
	S063198609	I.C. TDA 9860	IC TDA 9860
	S063210509	I.C. L 7808CV	IC L 7808CV
	S063285949	I.C. ST 24C04 AB1 (4K)	IC ST 24C04 AB1 (4K)
	S063349819	I.C. SAA 4981 (16:9 only)	IC SAA 4981 (solo 16:9)
	S063183959	I.C. TDA8395 (SECAM only)	IC TDA8395 (solo SECAM)
	S063546659	I.C. TDA 4665T	IC TDA 4665T
	S063586019	I.C. TDA 8601T	IC TDA 8601T
	S065621409	Flyback transformer 7000	Zeilentrafo 7000
	S065621509	Flyback transformer 7000 16:9/36" only	Zeilentrafo 7000 nur 16:9/36"
	S066900159	Quarz 3,58 MHz	Quarz 3,58 MHz
	S066900259	Quarz 4,43 MHz	Quarz 4,43 MHz
	S066901209	Quarz 12 MHz	Quarz 12 MHz
	S067071009	E/W coil 13,5 mH	Spule ost/west 13,5 mH
	S067081009	Bridge coil AT 4043/100	Spule AT 4043/100
	S067081409	Linearity coil	Spule Linearität
	S071013409	External speaker connector	Lautsprecherbuchse
	S071014209	SCART connector	Scartbuchse
	S071015409	Double vertical audio RCA cinch	Audiobuchse cinch
	S071020009	S-VHS connector 4 pole	S-VHS Buchse 4 polig
	S000557009	**IF Video/audio PCB cpl. (A2)**	**ZF Platine video/audio kpl. (A2)**
	S000557109	**IF Video/audio PCB cpl. (A2/NICAM)**	**ZF Platine video/audio (A2/NICAM)**
	S000557129	**IF Video/audio PCB cpl. (A2/NICAM/AM)**	**ZF Platine video/audio (A2/NICAM/AM)**
	S000557119	**IF Video/audio PCB cpl. (NICAM)**	**ZF Platine video/audio (NICAM)**
	S063598149	I.C. TDA 9814T	IC TDA 9814T
	S063598409	I.C. TDA 9840T	IC TDA 9840T
	S063372839	I.C. SAA 7283	IC SAA 7283
	S066900409	Quarz 10 MHz	Quarz 10 MHz
	S067320709	SAW filter G3964M	Filter SAW G3964M
	S067321509	SAW filter G9353M	Filter SAW G9353M
		SAW filter	Filter SAW
		SAW filter	Filter SAW
	S067400529	Ceramic filter SFT 5,5 MA	Keramikfilter SFT 5,5MA
	S067400539	Ceramic filter SFT 5,74 MA	Keramikfilter SFT 5,74 MA
	S067401089	Ceramic filter SFT 6,0 MA	Keramikfilter SFT 6,0 MA
	S067401109	Ceramic filter SFT 6,5 MA	Keramikfilter SFT 6,5 MA
	S067401059	Ceramic filter TPS 5,5 MWA	Keramikfilter TPS 5,5 MWA
	S067400009	Ceramic filter TPWA 01B	Keramikfilter TPWA 01B
	S067407809	Coil	Spule
	S067430009	Choke 4,7 mH 2%	Spule 4,7 mH 2%
	S069024409	Tuner	Tuner

Ref./Pos.	Part No. ET-Nr.	Description	Bezeichnung
	S000567009	**Power PCB cpl. 4:3/25"-28"**	**Powerplatine kpl. 4:3/25"-28"**
	S000567019	**Power PCB cpl. 4:3/34" - 16:9/36"**	**Powerplatine kpl. 4:3/34" - 16:9/36"**
	S000567509	**Power PCB cpl. 16:9/28"-32"**	**Powerplatine kpl. 16:9/28"-32"**
	S014182009	Condensator 820 pF NPO	Kondensator 820 pF NPO
	S017133009	Condensator 330 pF 1000 V	Kondensator 330 pF 1000 V
	S017222009	Condensator 2,2 nF 1000 V	Kondensator 2,2 nF 1000 V
	S020222009	Condensator 2,2 nF 4000 V	Kondensator 2,2 nF 4000 V
	S029621209	Condensator 1,2 nF 1%	Kondensator 1,2 nF 1%
	S030236809	Condensator 68 nF 250 VAC	Kondensator 68 nF 250 VAC
	S030242209	Condensator 220 nF 250 VAC	Kondensator 220 nF 250 VAC
	S034322219	Condensator 2,2 nF 250 VAC	Kondensator 2,2 nF 250 VAC
	S047003309	Fusible resistor 3,3 Ohm	Sicherheitswiderstand 3,3 Ohm
	S053051009	Safety resistor 1 MOhm VR37	Sicherheitswiderstand 1 MOhm VR37
	S053210709	Safety resistor 4,7 MOhm VR68	Sicherheitswiderstand 4,7 MOhm VR68
	S054000279	Wire wound resistor 0,27 Ohm 3 W	Widerstand 0,27 Ohm 3 W
	S055491009	Wire wound resistor 1 Kohm 9 W	Widerstand 1 KOhm 9 W
	S056590209	NTC resistor 4,7 Ohm	NTC Widerstand 4,7 Ohm
	S056591109	PTC resistor 4:3/25"-28"	PTC Widerstand 4:3/25"-28"
	S056591909	PTC resistor 4:3/34" - 16:9/28"-32"-36"	PTC Widerstand 4:3/34" - 16:9/28"-32"-36"
	S061111329	Diode 1N4007	Diode 1N4007
	S061284619	Diode BA159	Diode BA159
	S061300509	Diode BYW29/200	Diode BYW29/200
	S061302409	Diode BYW95B	Diode BYW95B
	S061302609	Diode BYW95C	Diode BYW95C
	S061401339	Diode BYD33 J	Diode BYD33 J
	S061912239	Zener diode 6,2 V	Diode zener 6,2 V
	S061961079	Zener diode 3,6 V	Diode zener 3,6 V
	S062756109	Transistor S 2000AF	Transistor S 2000AF
	S063164509	I.C. TEA 2261	IC TEA 2261
	S063411019	Optocoupler TCDT1101GB	Optokoppler TCDT1101GB
	S065707109	Power switch transformer 7000	Wandlertrafo 7000
	S066541709	Line filter	Netzfilter
	S000677009	**RGB Amplif. PCB cpl. 4:3**	**Bildröhrenplatine RGB 7000 4:3**
	S000677209	**RGB Amplif. PCB cpl. 16:9**	**Bildröhrenplatine RGB 7000 16:9**
	S000677239	**RGB Amplif. PCB cpl. 16:9 36"**	**Bildröhrenplatine RGB 7000 16:9 36"**
	S017233009	Condensator 3,3 nF 1000 V	Kondensator 3,3 nF 1000 V
	S035931019	Condensator 10 nF 1000 V	Kondensator 10 nF 1000 V
	S040590229	Elko 2,2 uF 250 V	Kondensator elettrolitico 2,2 uF 250 V
	S061281059	Diode BAV 103-GS08	Diode BAV 103-GS08
	S062740869	Transistor BF 871	Transistor BF 871
	S063151019	I.C. TEA 5101A	IC TEA 5101A
	S070001209	CRT socket	Bilröhrensockel
	S070001609	CRT socket (dynamic focus only)	Bildröhrensockel (nur dynamik Fokus)

Ref./Pos.	Part No. ET-Nr.	Description	Bezeichnung
	S000797009	**Dynamic focus PCB cpl.**	**Dynamik Fokus Platine**
	S056592109	VDR resistor	VDR Widerstand
	S058549009	Dynamic focus variable resistor	Dynamikfokusregler
	S065625719	Focus cable	Fokuskabel
	S065625819	G2 cable	G2 Kabel
	S066830109	Dinamic focus modulator coil AT4043/67A	Spule Dynamic Focus AT4043/67A
	S000747139	**Teletext TOP/FLOF/ATS PCB cpl.**	**Videotextplatine 7000 TOP/FLOF/ATS cpl.**
	S000747129	**Teletext TOP/FLOF PCB cpl.**	**Videotextplatine 7000 TOP/FLOF kpl.**
	S063185719	I.C. ST 24C02 (2k)	IC ST 24C02 (2K)
	S063283519	I.C. 87C652-4N40 (uP ATS)	IC 87C652-4N40 (uP ATS)
	S063283709	I.C. P83C654 FBP/0541 CTV988	IC P83C654 FBP/0541 CTV988
	S063285949	I.C. ST 24C04 AB1 (4K)	IC ST 24C04 AB1 (4K)
	S063352819	I.C. SAA 5281 P/E	IC SAA 5281 P/E
	S063574009	I.C. 74HC4053D	IC 74HC4053D
	S066901209	Quarz 12 MHz	Quarz 12 MHz
	S066902709	Quarz 27 MHz	Quarz 27 MHz
	S000807019	**Subwoofer booster PCB cpl.**	**Subwoofer Booster Platine**
	S063126169	I.C. TDA 2616	IC TDA 2616
	S000787009	**PIP PCB cpl.**	**PIP Platine**
	S047001009	Safety resistor 1 Ohm	Sicherheitswiderstand 1 Ohm
	S048002209	Safety resistor 2,2 Ohm	Sicherheitswiderstand 2,2 Ohm
	S061961079	Zener diode 3,6 V	Zenerdiode 3,6 V
	S062520349	Transistor BC 640	Transistor BC 640
	S063125799	I.C. TDA 2579A	IC TDA 2579A
	S063146559	I.C. TDA 4655	IC TDA 4655
	S063198009	I.C. TDA 9800	IC TDA 9800
	S063546659	I.C. TDA 4665T	IC TDA 4665T
	S063570109	I.C. 74 HC 4066D	IC 74 HC 4066D
	S063591879	I.C. SDA 9187	IC SDA 9187
	S063591889	I.C. SDA 9188	IC SDA 9188
	S066900119	Quarz 8,86 MHz	Quarz 8,86 MHz
	S066900329	Quarz 7,16 MHz	Quarz 7,16 MHz
	S067316009	SAW Filter G 1984 M	Filter SAW G 1984 M
	S067330209	Resonator CSA 20,48 MHz	Filter CSA 20,48 MHz
	S067368109	Ceramic filter TPS 4,43 MB	Keramikfilter TPS 4,43 MB
	S067401059	Ceramic filter TPS 5,5 MWA	Keramikfilter TPS 5,5 MWA
	S067407809	Coil	Spule
	S069024409	Tuner HTP 200S	Tuner HTP 200S
	S069310009	PIP-Power splitter	PIP-Power splitter
	S092427609	PIP antenna cable	Antennenkabel PIP

Ref./Pos.	Part No. ET-Nr.	Description	Bezeichnung
	S000807009	**Dolby Pro Logic PCB cpl.**	**Dolby Pro Logic Modul kpl.**
	S061961959	Zener diode 10V	Zenerdiode 10V
	S063126169	I.C. TDA2616	IC TDA2616
	S063363009	I.C. M51132L	IC M51132L
	S063363309	I.C. M65830BP	IC M65830BP
	S063363509	I.C. M69032P	IC M69032P
	S063540479	I.C. HEF4047BT	IC HEF4047BT
	S067330309	Ceramic resonator CSA 2.00 MG	Keramikfilter CSA 2.00 MG
	S068070909	Relay SVR 12	Relais SVR 12
	S068500309	Switch SK 22F01G9	Schalter SK 22F01G9
	S071013409	External speaker connector	Buchse Externer Lautsprecher
	S000817029	**Sat receiver PCB cpl.**	**Sat receiver komplett**

Spare parts list
Ersatzteilliste

TV 1169 / TV 2807 / 2816 PIP / 2840
TV 8201 / 8295 PIP / 8250

Chassis Professional 7000

Ref./Pos.	Part No. ET-Nr.	Description	Bezeichnung
	S000847209	**Manuals controls PCB cpl. (TV 1169)**	**Bedienteil cpl. (TV 1169)**
	S000847029	**Manuals controls PCB cpl. (TV2807/2816/8201/8295)**	**Bedienteil cpl. (TV2807/2816/8201/8295)**
	S000847089	**Manuals controls PCB cpl. (TV 2840/8250)**	**Bedienteil cpl. (TV 2840/8250)**
	S062000409	LED diode red/green	LED rot/grün
	S068057009	Mains switch	Netzschalter
	S068056309	Pusch EKPT 1105 S	Schalter EKPT 1105S
	S068149109	IR receiver TFMS 5360	IR-Empfänger TFMS 5360
	S071015309	Earphone jack	Kopfhörerbuchse
	S071020109	RCA jack white	RCA-Buchse weiß
	S071020119	RCA jack red	RCA-Buchse rot
	S071020129	RCA jack yellow	RCA-Buchse gelb
	S078970009	Manuals controls holder	Halter Bedienteil
	S000847709	Door (TV 1169)	Door (TV 1169)
	S000847529	Door (TV2807/2816PIP/8201/8295PIP)	Door (TV2807/2816PIP/8201/8295PIP)
	S000847589	Door (TV 2840/8250)	Door (TV 2840/8250)
	S082811409	Door holder	Halter Door
	S082900009	Door push-push block	Door Push-Push Block
	S083307009	Mains switch button	Knopf Netzschalter
	S007864819	Cabinet front (TV 1169)	Gehäusefront (TV 1169)
	S007864609	Cabinet front (TV 2807/2816PIP/2840)	Gehäusefront (TV 2807/2816PIP/2840)
	S007865359	Cabinet front (TV 8201/8295PIP/8250)	Gehäusefront (TV 8201/8295PIP/8250)
	S007814509	Cabinet (TV 1169)	Mittelgehäuse (TV 1169)
	S078145009	Cabinet (TV 2807/2816PIP/2840)	Mittelgehäuse (TV 2807/2816PIP/2840)
	S078154309	Cabinet (TV 8201/8295PIP/8250)	Mittelgehäuse (TV 8201/8295PIP/8250)
	S080154309	Back cover	Rückwand
	S060328509	CRT 28" W66EDX013X010 (1169/2807/2816/2840)	Bildröhre 28" W66EDX013X010 (1169/2807/2816/2840)
	S060332009	CRT 32" W76EDX013X101 (TV 8201/8295PIP/8250)	Bildröhre 32" W76EDX013X101 (TV 8201/8295PIP/8250)
	S067203409	Degauss coil (TV 2807/2816PIP/2840)	Entmagnetisierungsspule (TV 2807/2816PIP/2840)
	S067203509	Degauss coil (TV 8201/8295PIP/8250)	Entmagnetisierungsspule (TV 8201/8295PIP/8250)
	S068270209	Transmitter 7000 + Dolby	Fernbedienung 7000 + Dolby
	S073173409	Speaker 8 Ohm (TV 1169)	Lautsprecher 8 Ohm (TV 1169)
	S073173509	Speaker 8 Ohm	Lautsprecher 8 Ohm
	S073173109	Woofer speaker 8 Ohm	Lautsprecher (Woofer) 8 Ohm
	S087170509	Chassis holder front	Halter Chassis (Front)
	S087171009	Chassis rear connector cover	Buchsenplatte
	S073177019	Rear box cpl. (TV 2840/8250)	Surroundbox cpl. (TV 2840/8250)
	S092431619	Cable Rear box with connector	Kabel Surroundbox mit Stecker
	S092431609	Cable Rear box without connector	Kabel Surroundbox ohne Stecker

Spare parts list
Ersatzteilliste

TV735 / 755S / 7109PIP
Chassis Professional 7000

Ref./Pos.	Part No. ET-Nr.	Description	Bezeichnung
	S000847019	**Manuals controls PCB cpl. (TV 735/755S)**	**Bedienteil cpl. (TV 735/755S)**
	S000847009	**Manuals controls PCB cpl. (TV 7019PIP)**	**Bedienteil cpl. (TV 7109PIP)**
	S062000409	LED diode red/green	LED rot/grün
	S068055309	Mains switch	Netzschalter
	S068056309	Pusch EKPT 1105 S	Schalter EKPT 1105S
	S068149109	IR receiver TFMS 5360	IR-Empfäanger TFMS 5360
	S071015309	Earphone jack	Kopfhörerbuchse
	S078949519	Manuals controls holder (TV 735/755S)	Halter Bedienteil (TV 735/755S)
	S078944109	Manuals controls holder (TV 7109PIP)	Halter Bedienteil (TV 7109PIP)
	S079049409	Door (TV 735/755S)	Door (TV 735/755S)
	S079044009	Door (TV 7109PIP)	Door (TV 7109PIP)
	S083305009	Mains switch button (TV 735/755S)	Knopf Netzschalter (TV 735/755S)
	S083305509	Mains switch button (TV 7109PIP)	Knopf Netzschalter (TV 7109PIP)
	S091041609	Mains switch spring	Feder Netzschalter
	S007865439	Cabinet front (TV 735)	Gehäusefront (TV 735)
	S007865469	Cabinet front (TV 755S)	Gehäusefront (TV 755S)
	S007865509	Cabinet front (TV 7109PIP)	Gehäusefront (TV 7109PIP)
	S078154309	Cabinet (TV 735/755S)	Mittelgehäuse (TV 735/755S)
	S078155009	Cabinet (TV 7109PIP)	Mittelgehäuse (TV 7109PIP)
	S080154209	Back cover	Rückwand
	S060328019	CRT 28" A66EAK71X01	Bildröhre 28" A66EAK71X01
		(TV 7109PIP/735)	(TV 7109PIP/735)
	S060328309	CRT 28" A66EAK252X11(TV 755S)	Bildröhre 28" A66EAK252X11(TV 755S)
	S067202119	Degauss coil	Entmagnetisierungsspule
	S068270109	Transmitter 7000 ORION	Fernbedienung 7000
	S073173409	Speaker 8 Ohm	Lautsprecher 8 Ohm
	S087170009	Chassis holder side	Halter Chassis (Seite)
	S087170509	Chassis holder front	Halter Chassis (Front)
	S087171009	Chassis rear connector cover	Buchsenplatte

Spare parts list
Ersatzteilliste

TV 8607 PIP / TV 9207
Chassis Professional 7000

Ref./Pos.	Part No. Et-Nr.	Description	Bezeichnung
	S000847039	**Manuals controls PCB cpl. (TV 8607)**	**Bedienteil kpl. (TV 8607)**
	S000847109	**Manuals controls PCB cpl. (TV 9207)**	**Bedienteil kpl. (TV 9207)**
	S000834309	**IR receiver PCB cpl.**	**IR-Empfänger kpl.**
	S062000409	LED diode red/green	LED rot/grün
	S068055309	Mains switch	Netzschalter
	S068056309	Pusch EKPT 1105 S	Schalter EKPT 1105S
	S068149109	IR receiver TFMS 5360	IR-Empfänger TFMS 5360
	S071015309	Earphone jack	Kopfhörerbuchse
	S071020109	RCA jack white (TV 9207)	RCA-Buchse weiß (TV 9207)
	S071020119	RCA jack red (TV 9207)	RCA-Buchse rot (TV 9207)
	S071020129	RCA jack yellow (TV 9207)	RCA-Buchse gelb (TV 9207)
	S078941709	Manuals controls holder (TV 8607)	Halter Bedienteil (TV 8607)
	S078949429	Manuals controls holder (TV 9207)	Halter Bedienteil (TV 9207)
	S079041509	Door (TV 8607)	Door (TV 8607)
	S079049409	Door (TV 9207)	Door (TV 9207)
	S083304209	Mains switch button (TV 8607)	Knopf Netzschalter (TV 8607)
	S083305009	Mains switch button (TV 9207)	Knopf Netzschalter (TV 9207)
	S091041709	Mains switch spring	Feder Netzschalter
	S007867109	Cabinet front (TV 8607)	Gehäusefront (TV 8607)
	S007817519	Cabinet front (TV 9207)	Gehäusefront (TV 9207)
	S078171009	Cabinet (TV 8607)	Mittelgehäuse (TV8607)
	S078171109	Subwoofer cover (TV 8607)	Subwoofergehäuse (TV 8607)
	S080141909	Back cover (TV 8607)	Rückwand (TV 8607)
	S078175909	Back cover (TV 9207)	Rückwand (TV 9207)
	S079471009	Front glass (TV 8607)	Frontscheibe (TV 8607)
	S060334109	CRT 34" A79ECU33X01 (TV 8607)	Bildröhre 34" A79ECU33X01 (TV 8607)
	S060336009	CRT 36" A86ECT13X01 (TV 9207)	Bildröhre 36" A86ECT13X01 (TV 9207)
	S067203319	Degauss coil (TV 8607)	Entmagnetisierungsspule (TV 8607)
	S067203609	Degauss coil (TV 9207)	Entmagnetisierungsspule (TV 9207)
	S068270109	Transmitter 7000	Fernbedienung 7000
	S073172209	Speaker 8 Ohm (TV 8607)	Lautsprecher 8 Ohm (TV 8607)
	S073170809	Speaker 8 Ohm (TV 9207)	Lautsprecher 8 Ohm (TV 9207)
	S073170659	Tweeter (TV 9207)	Hochtöner (TV 9207)
	S087170009	Chassis holder side (TV 8607)	Halter Chassis Seite (TV 8607)
	S087170509	Chassis holder front (TV 8607)	Halter Chassis Front (TV 8607)
	S087124809	Chassis holder (TV 9207)	Halter Chassis (TV 9207)
	S087171009	Chassis rear connector cover	Buchsenplatte

Spare parts list
Lista parti di ricambio

287CE TV 750 / 287GE TV775
Chassis Professional 7000

Ref./Pos.	Part No. Codice	Description	Descrizione
	S000847239	**Manuals controls PCB cpl. (TV 750)**	**Bedienteil kpl. (TV 750)**
	S000847259	**Manuals controls PCB cpl. (TV 775)**	**Bedienteil kpl. (TV 775)**
	S062000409	LED diode red/green	LED rot/grün
	S068055309	Mains switch	Netzschalter
	S068056309	Pusch EKPT 1105 S	Schalter EKPT 1105S
	S068149109	IR receiver TFMS 5360	IR-Empfänger TFMS 5360
	S071015309	Earphone jack	Kopfhörerbuchse
	S071020109	RCA jack white	RCA-Buchse weiß
	S071020119	RCA jack red	RCA-Buchse rot
	S071020129	RCA jack yellow	RCA-Buchse gelb
	S078944209	Manuals controls holder (TV 750)	Halter Bedienteil (TV 750)
	S078949429	Manuals controls holder (TV 775)	Halter Bedienteil (TV 775)
	S000847639	Door (TV 750)	Door (TV 750)
	S000847669	Door (TV 775)	Door (TV 775)
	S083305509	Mains switch button (TV 750)	Knopf Netzschalter (TV 750)
	S083305009	Mains switch button (TV 775)	Knopf Netzschalter (TV 775)
	S091041609	Mains switch spring	Feder Netzschalter
	S007865819	Cabinet front (TV 750)	Gehäusefront (TV 750)
	S007865469	Cabinet front (TV 775)	Gehäusefront (TV 775)
	S007815509	Cabinet (TV 750)	Mittelgehäuse (TV 750)
	S007815439	Cabinet (TV 775)	Mittelgehäuse (TV 775)
	S080154209	Back cover	Rückwand
	S060328019	CRT 28" A66EAK71X01	Bildröhre 28" A66EAK71X01
	S067202119	Degauss coil	Entmagnetisierungsspule
	S068270309	Transmitter 7000	Fernbedienung 7000
	S073173409	Speaker 8 Ohm (TV 750)	Lautsprecher 8 Ohm (TV 750)
	S073173709	Speaker 8 Ohm (TV 775)	Lautsprecher 8 Ohm (TV 775)
	S073173109	Woofer speaker 8 Ohm	Lautsprecher (Woofer) 8 Ohm
	S000887009	Subwoofer box cpl.	Subwooferbox kpl.
	S000887019	Rear box cpl.	Surroundbox kpl.
	S087170009	Chassis holder side	Halter Chassis Seite
	S087170509	Chassis holder front	Halter Chassis Front
	S087171009	Chassis rear connector cover	Buchsenplatte

Service procedure - Chassis Professional 7000

When replacing the picture tube and NVM memory (ICR1), certain adjustments may be necessary. The procedure is as follows:

1. Select service mode by switching on (main power switch) while at the same time pressing and holding the MENU key at the receiver until the red LED lights up.

2. Press the standby button at the remote control: the receiver will come into operation either on programme 1, or in position AV1 if the voltage at pin 8 of the SCART 1 connector is +12V. Accordingly, it is important to establish that the test signal needed for adjustment purposes is available either on prog 1 or at the SCART 1 input, since no further source selection can be made in service mode.

3. The accessible functions are listed below: the increase and decrease buttons [↑] and [↓] on the remote control are used to select the function, and the adjustment can then be made with the remote control volume buttons [+] and [-].
   it is good policy to make a note of the initial value before making any alteration, so that former settings can be reinstated with ease if necessary.

4. Pressing the SAT button of the remote control accesses an option byte (OP) which is used to adapt the software functions to the various types of receiver configuration (4:3 or 16:9 tube, Dolby decoder, etc.).
   OP has a hexadecimal value which is altered using the volume buttons [+] and [-] of the remote control. The correct value to enter is indicated alongside the caption OPTION BYTE on a label affixed to the back of every receiver.

5. The vertical geometrie of the picture is adjusted beginning with the VSL function (vertical slope), which must be set a that the horizontal centre line of the test signal is exactly on the border diving the picture area from the black area at bottom. This done, VSL **should not be moved again.**

6. SA and LA are used to adjust the separation between left and right hand audio channels, and the sound level, respectively. A stereo RF generator is therefore required. Remove modulation from the left hand channel and adjust LA to give 1.4 Vpp at pin 1 of the SCART 1 connector. Next, adjust SA to obtain a minimum residual signal at pin 3 of SCART 1. If there is no stereo generator available, a reasonable approximation will be LA=01 and SA=07.

7. Having finished the necessary adjustments, press the TV button of the remote control to save all the new settings and restore normal operation of the receiver.

SA	Audio stereo adjustment	**VAM**	Vertical amplitude
LA	Audio level adjustment	**VSH**	Vertical shift
HSH	Horizontal shift	**SC**	Vertical S correction (linearity)
EW	Horizontal amplitude	**WPR**	White balance correction
PW	Parabola correction	**WPG**	White balance correction
CP	Corner parabola correction	**WPB**	White balance correction
TC	Trapeze correction	**DLY**	Luma-chroma delay
VSL	Vertical Slope		